SII

USER'S GUIDE

Thermal Printer

MP-B21L SERIES

Read this USER'S GUIDE carefully before using the printer.
Keep this USER'S GUIDE in a place where it can be accessed quickly.

Seiko Instruments Inc.

Rev.01 April 2024
Rev.02 September 2024
Rev.03 October 2024
Rev.04 April 2025
Rev.05 July 2026

Copyright ©2024-2026 by Seiko Instruments Inc. All rights reserved.

The information contained herein is the property of SII and shall not be reproduced in whole or in part without prior written approval of SII.

SII reserves the right to make changes in the specifications and materials contained herein without notice and shall not be responsible for any damages (including consequential) caused by reliance on the materials presented, including but not limited to typographical, arithmetic, and listing errors.

SII is a trademark of Seiko Instruments Inc.
Apple®, iPhone®, iPad®, iPod® are trademarks of Apple Inc.
Bluetooth® is a registered trademark of Bluetooth SIG, Inc.
The N mark is a trademark or registered trademark of NFC Forum,Inc. in the United States and in other countries.
Android™ is a trademark of Google LLC.
IOS is a trademark or registered trademark of Cisco in the U.S. and other countries and is used under license.
ZPL II is a registered trademark of Zebra Technologies.
All other trademarks are the properties of their respective companies.

Applicable EC Directive and Standards

Product: Thermal Printer MP-B21L-Bx

Directive:	Title
2014/53/EU	Radio Equipment Directive
2011/65/EU (Commission Delegated Directive (EU) 2015/863)	Restriction of the use of certain hazardous substances (RoHS) Directive

Standards
- EN 301 489-1
- EN 301 489-17
- EN 300 328
- EN 62368-1
- EN 62479
- EN IEC 63000

Product: Thermal Printer MP-B21L-Wx

Directive:	Title
2014/53/EU	Radio Equipment Directive
2011/65/EU (Commission Delegated Directive (EU) 2015/863)	Restriction of the use of certain hazardous substances (RoHS) Directive

Standards
- EN 301 489-1
- EN 301 489-17
- EN 300 328
- EN 301 893
- EN 62368-1
- EN 50566
- EN IEC 63000

Restrictions: Operations in 5150-5350 MHz band is for indoor use only.
This product is for use only with nominal voltage in each country.

This product may be used in following all EU and EFTA countries:

EU

Austria, Belgium, Bulgaria, Croatia, Cyprus, Czech Republic, Denmark, Estonia, Finland, France, Germany, Greece, Hungary, Ireland, Italy, Latvia, Lithuania, Luxembourg, Malta, Poland, Portugal, Romania, Slovakia, Slovenia, Spain, Sweden, Netherlands

EFTA

Iceland, Norway, Switzerland, Liechtenstein

Product: AC adapter PW-F1215-W1

Directive:	Title
2014/30/EU	EC Electromagnetic Compatibility Directive
2014/35/EU	EC Low Voltage Directive
2011/65/EU (Commission Delegated Directive (EU) 2015/863)	Restriction of the use of certain hazardous substances (RoHS) Directive

Standards

EN 55032 Class B
EN IEC 61000-3-2
EN 61000-3-3
EN 55035
EN 62368-1
EN IEC 63000

Product: AC adapter PW-D0940-W2

Directive:	Title
2014/30/EU	EC Electromagnetic Compatibility Directive
2014/35/EU	EC Low Voltage Directive
2011/65/EU (Commission Delegated Directive (EU) 2015/863)	Restriction of the use of certain hazardous substances (RoHS) Directive

Standards

EN 55032 Class B
EN IEC 61000-3-2
EN 61000-3-3
EN 55035
EN 62368-1
EN IEC 63000

Product: Battery Charger PWC-A071-A1

Directive:	Title
2014/30/EU	EC Electromagnetic Compatibility Directive
2011/65/EU (Commission Delegated Directive (EU) 2015/863)	Restriction of the use of certain hazardous substances (RoHS) Directive

Standards

EN 55032 Class A
EN IEC 61000-3-2
EN 61000-3-3
EN 55035
EN IEC 63000

Product: Battery Charger PWC-A074-A1

Directive:	Title
2014/30/EU	EC Electromagnetic Compatibility Directive
2011/65/EU (Commission Delegated Directive (EU) 2015/863)	Restriction of the use of certain hazardous substances (RoHS) Directive

Standards

EN 55032 Class A
EN IEC 61000-3-2
EN 61000-3-3
EN 55035
EN IEC 63000

Applicable UK Directive and Standards

Product: Thermal Printer MP-B21L-Bx

Directive:

Radio Equipment Regulations 2017
The Restriction of the Use of Certain Hazardous Substances in Electrical and Electronic Equipment Regulations 2012

Standards

BS EN 301 489-1
BS EN 301 489-17
BS EN 300 328
BS EN 62368-1
BS EN 62479
BS EN IEC 63000

Product: Thermal Printer MP-B21L-Wx

Directive:

Radio Equipment Regulations 2017
The Restriction of the Use of Certain Hazardous Substances in Electrical and Electronic Equipment Regulations 2012

Standards

BS EN 301 489-1
BS EN 301 489-17
BS EN 300 328
BS EN 301 893
BS EN 62368-1
BS EN 50566
BS EN IEC 63000

UK
CA

Restrictions: Operations in 5150-5350 MHz band is for indoor use only.
This product is for use only with nominal voltage in each country.

Product: AC adapter PW-F1215-W1

Directive:

Electromagnetic Compatibility Regulations 2016
Electrical Equipment (Safety) Regulations 2016
The Restriction of the Use of Certain Hazardous Substances in Electrical and Electronic Equipment Regulations 2012

Standards

BS EN 55032 Class B
BS EN IEC 61000-3-2
BS EN 61000-3-3
BS EN 55035
BS EN 62368-1
BS EN IEC 63000

Product: AC adapter PW-D0940-W2

Directive:

Electromagnetic Compatibility Regulations 2016
Electrical Equipment (Safety) Regulations 2016
The Restriction of the Use of Certain Hazardous Substances in Electrical and Electronic Equipment Regulations 2012

Standards

BS EN 55032 Class B
BS EN IEC 61000-3-2
BS EN 61000-3-3
BS EN 55035
BS EN 62368-1
BS EN IEC 63000

Product: Battery Charger PWC-A071-A1

Directive:

Electromagnetic Compatibility Regulations 2016
The Restriction of the Use of Certain Hazardous Substances in Electrical and Electronic Equipment Regulations 2012

Standards

BS EN 55032 Class A
BS EN IEC 61000-3-2
BS EN 61000-3-3
BS EN 55035
BS EN IEC 63000

Product: Battery Charger PWC-A074-A1

Directive:

Electromagnetic Compatibility Regulations 2016
The Restriction of the Use of Certain Hazardous Substances in Electrical and Electronic Equipment Regulations 2012

Standards

BS EN 55032 Class A
BS EN IEC 61000-3-2
BS EN 61000-3-3
BS EN 55035
BS EN IEC 63000

Federal Communications Commission (FCC) compliance statement

NOTE: This equipment has been tested and found to comply with the limits for a Class A digital device, pursuant to part 15 of the FCC Rules. These limits are designed to provide reasonable protection against harmful interference when the equipment is operated in a commercial environment. This equipment generates uses and can radiate radio frequency energy and, if not installed and used in accordance with the instruction manual, may cause harmful interference to radio communications. Operation of this equipment in a residential area is likely to cause harmful interference in which case the user will be required to correct the interference at his own expense.

The changes or modifications not expressly approved by the party responsible for compliance could void the user's authority to operate the device.

Innovation, Science and Economic Development (ISED) compliance statement

This device contains licence-exempt transmitter(s)/receiver(s) that comply with Innovation, Science and Economic Development Canada's licence-exempt RSS(s).Operation is subject to the following two conditions:
(1) This device may not cause interference.
(2) This device must accept any interference, including interference that may cause undesired operation of the device.

Restrictions: Operations in 5150-5350 MHz band is for indoor use only.

RF exposure compliance

This transmitter must not be co-located or operating in conjunction with any other antenna or transmitter.

Applied to only Bluetooth model:

contains FCC ID: SQK-7BTZ61
contains IC: 337L-7BTZ61

Applied to only WLAN model:

contains FCC ID: 2ADXS-WFM60-SFP2501
contains IC: 12641A-WFM6SFP2501

1. INTRODUCTION

This manual describes how to handle the MP-B21L series thermal printer (hereinafter referred to as printer) and optional products such as the battery pack, the AC adapter, the AC cable, the cradle, the car charger, the battery charger, and the partition plate.

Read through "2. SAFETY PRECAUTIONS" and "3. OPERATING PRECAUTIONS" carefully before using the products, and handle them safely and properly.
Keep this manual in a safe place and available for future use whenever necessary.

This manual consists of the following sections.

1. INTRODUCTION 1
2. SAFETY PRECAUTIONS 2
3. OPERATING PRECAUTIONS 7
4. PREPARATION 11
5. IDENTIFYING MODEL TYPE 13
6. EACH PART OF PRINTER 14
7. LED INDICATION OF PRINTER 16
8. INSTALLING BATTERY PACK 21
9. LOADING THERMAL PAPER 24
10. GAP CALIBRATION (ONLY FOR LABEL) 28
11. TEST PRINT 29
12. FUNCTION SETTINGS 35
13. CONNECTING TO HOST DEVICE 38
14. PAPER WIDTH SETTING 42
15. INSTALLING BELT CLIP / SHOULDER STRAP 43
16. CHARGING BATTERY PACK 48
17. CHARGING FROM CRADLE 53
18. CHARGING FROM CAR CHARGER 57
19. CHARGING FROM BATTERY CHARGER 63
20. PRINTER MAINTENANCE 70
21. TROUBLESHOOTING 71
22. SPECIFICATIONS 72
23. ACCESSORIES AND CONSUMABLE PARTS 77
24. MS SETTINGS LIST 79

2. SAFETY PRECAUTIONS

In this SAFETY PRECAUTIONS, the following symbols are used to ensure safe and proper use of products and prevent from damaging devices.

WARNING	Failure to follow the instructions marked with this symbol could result in severe personal injury or death.
CAUTION	Failure to follow the instructions marked with this symbol could result in minor personal injury or property damage.

■ About symbols

The symbol indicates information which you should pay attention to (including danger and warnings).

The symbol indicates information about prohibited procedures.

indicates "Disassembly is prohibited."

The symbol indicates information about obligated or instructed procedures.

indicates "Unplug the power plug from the outlet."

OPERATING PRECAUTIONS

The "products" shall collectively mean the printer, the battery pack, the AC adapter, the AC cable, the cradle, the car charger, the battery charger, and the partition plate.

⚠WARNING

Never attempt the following. Failure to follow the instructions leads to fire, electric shock, or accident.	
	DO NOT disassemble or reconstruct the products.
	Take care not to spill liquid on the products.
	DO NOT touch the products with wet hands.
	DO NOT insert any foreign objects such as a piece of metal or any liquid into the products.
	Keep the terminals of the products, power connector, AC plug, DC plug, and cigar plug away from dust and metal objects.
	DO NOT touch the terminals of the products, power connector, AC plug, DC plug, and cigar plug. To avoid short circuits, prevent terminals of the products, power connector, AC plug, DC plug, and cigar plug from touching any conductor such as metal.
	Make sure that the AC plug, DC plug, and cigar plug are securely plugged in when using the products.
	DO NOT damage the AC cable, AC plug, DC plug, and cigar plug. DO NOT bend, pull, twist the cable forcibly or place heavy stuff on it.
	Use the printer only with the specified battery pack, specified AC adapter, specified AC cable, specified cradle, and specified car charger.
	Use the AC adapter only for the specified printer or specified battery charger.
	DO NOT connect any AC cable other than specified with the AC adapter.
	Use the battery charger only with the specified battery pack, specified AC adapter and specified AC cable.
	DO NOT connect the car charger to the battery charger.
	DO NOT use the AC adapter and the car charger at a voltage other than the specified voltage.
	DO NOT charge the battery pack from any printer or battery charger other than the specified printer or specified battery charger.
	Be sure to charge the battery pack under the specified temperature range. Otherwise, it may cause leakage, overheating, rupture, or fire.

	DO NOT expose the battery pack in a fire or heat it.
	DO NOT leave the battery pack under high temperature conditions such as in scorching heat, inside a car, or near a fire. Otherwise, it may cause leakage, overheating, rupture, or fire.
	DO NOT apply strong impact to the battery pack with a hammer or nail, and DO NOT crush it.
	DO NOT print out during a vehicle driving. Ejected thermal paper may hinder a vehicle driving.

Be sure to observe the following instructions. Failure to follow the instructions may lead fire, electric shock, or accident.	
	Be sure to use only in countries where the products meet the regulations. Using non-compliant products may endanger the safety of products or be considered against regulations.
	Be sure to hold the plug when unplugging the AC cable, DC cable, or cigar plug from the outlet.
	Make sure to turn off the printer before connecting the AC adapter. After plugging the DC plug of AC adapter, plug the AC plug to an outlet.
	Make sure to turn off the printer before connecting the car charger. After plugging the DC plug of the car charger, plug the cigar plug to a car accessory socket.
	Make sure to turn off the printer when installing/removing the battery pack.
	Make sure to unplug the AC plug from the outlet after using the battery charger. And make sure to remove the battery pack from the battery charger.
	Make sure to unplug the cigar plug from the car accessory socket after using the car charger.

Procedures to take when in trouble

Follow the instructions in the following cases. Failure to follow the instructions may lead fire, electric shock, or accident.	
	Turn off the printer, and unplug the AC plug from the outlet in any of the following cases. (In the case of using the car charger, unplug the cigar plug from the car accessory socket.) And then, remove the battery pack. ◆ Abnormal state continues. ◆ The products are giving off an unusual smell, smoke, excessive heat or unusual noise. ◆ A piece of metal, water or other foreign objects get into the products. ◆ The case is broken.
	When the cable of the AC adapter or AC cable is damaged, unplug the AC plug from the outlet. DO NOT use a damaged AC adapter or AC cable. When the cable of the car charger is damaged, unplug the cigar plug from the car accessory socket. DO NOT use the car charger which has damaged cable.
	In any of the following cases, remove the battery pack from the printer or battery charger. Then, stop using the battery pack and never put it close to fire. ◆ The battery pack is giving off an unusual smell, smoke or excessive heat. ◆ The case is broken. ◆ Liquid is leaking.
	When leaking liquid from battery pack gets into your eyes, flush them immediately with clean water and see a doctor immediately. Otherwise it may cause vision loss.
	When leaking liquid from battery pack contacts your skin or clothing, flush them immediately with clean water.

For wireless communication

Observe the following instructions.	
	Always turn off the printer in areas or regions where its use is prohibited, such as in an airplane.
	The printer may affect medical or other electronic devices. Obtain information and data concerning influence due to radio interference from each device manufacturer or dealer.

⚠CAUTION

Observe the following instructions. Failure to follow the instructions may lead fire, electric shock, or accident.	
	Turn off the printer and unplug the AC plug from the outlet when not in use for a long time or before maintenance. And remove the battery pack from the printer or battery charger.
	DO NOT use or store the products in the following locations: ◆ Locations exposed to direct sunlight or high temperature such as in a car. ◆ Locations exposed to high humidity, a lot of dust, and liquid. ◆ Locations subject to strong vibration, or unstable locations.

	DO NOT cover the products with a cloth when in use.
	NEVER touch the thermal head immediately after printing because it may get hot. Be sure to allow it to cool down before clearing a paper jam or cleaning the head.
	The printer has 2 paper cutters on the paper outlet: one is on the printer side, and the other is on the paper cover side. DO NOT touch the cutters directly with hands. Especially, be careful not to touch the exposed cutters while the paper cover is open.
	Keep loose objects such as long hair away from the printer while the printer operates. When they fall into the printer, it may cause personal injury or damage the printer.
	To prevent the battery pack from dropping off, be sure to install and fix it securely to the printer or battery charger. Dropped battery pack may cause personal injury or malfunction.
	Be sure to install the shoulder strap to the printer securely when using it. Dropped printer may cause personal injury or malfunction.
	Avoid the direct skin contact with the battery pack while using the belt clip or shoulder strap. Prolonged skin contact may cause low-temperature burns.
	Keep the products away from infants and children.

3. OPERATING PRECAUTIONS

Be careful of the following precautions and use the products properly in order to deliver and maintain the full performance of the products.

■ Using Products

Precautions for use environment

- ◆ Be careful not to drop or bump the products on a hard surface.
- ◆ DO NOT install the products in direct sunlight.
- ◆ Be careful about the ambient temperature and humidity.
  Suitable environment for the use of the printer is as follows:

	Range of the temperature	Range of the humidity
Printing	-20°C to 55°C (-4°F to 131°F)	10%RH to 90%RH (Non condensing)
Charging	0°C to 40°C (32°F to 104°F)	10%RH to 90%RH (Non condensing)

See "22. SPECIFICATIONS" for the guaranteed humidity range at each temperature.

- ◆ Printing under a low temperature (0°C (32°F) or lower) environment might cause deterioration of the adhesive strength of the label. Confirm with the label in advance.
- ◆ DO NOT install the products near devices that generate strong magnetism such as a copy machine motor.
- ◆ DO NOT install the products in a location that is subject to corrosive gas, siloxane, and so on.
- ◆ DO NOT connect the AC adapter or AC cable to the same outlet with devices that generate noise.

Precautions on use and operation

- ◆ DO NOT print without the thermal paper.
- ◆ DO NOT use thermal papers taped together.
- ◆ NEVER forcibly pull out the thermal paper by hand with the thermal paper loaded.
- ◆ DO NOT open the paper cover during printing.
- ◆ DO NOT touch the thermal paper during printing. Covering the paper outlet or pulling out the thermal paper when ejecting may cause a paper jam or line feed failure.
- ◆ DO NOT connect or disconnect the USB cable during printing or communication.
  DO NOT touch the USB cable plug during printing.
- ◆ When handling the printer, be aware of static electricity. When the static electricity is discharged, this could cause a USB communication failure.
  When this problem occurs, disconnect the USB plug that is connected to the host device and wait a few seconds before connecting it again.
- ◆ DO NOT remove the battery pack or AC adapter during printing or communication.
- ◆ If the printer suspends printing because the battery remaining capacity becomes low, connect the AC adapter and resume printing or communication.
- ◆ DO NOT use the thermal head when it is wet. Doing so may damage the printer.
- ◆ Printing under low temperature environment or printing at a high print rate might cause unclear

printing or generate loud sound. This is not a failure in the printer but an inherent paper phenomenon.

- Continuous printing with a high print rate might cause temporarily stop printing by temperature detection of the printer. Printing resumes when the printer's temperature cools down. When this error occurs and "Data Discard Selection When Error Occurs" in the Function Settings is "Enable", the print data transmitted when an error occurs is discarded.
- In low temperature, the usable operating time of the printer may be shortened due to the characteristics of the battery pack.
- The indicator of battery remaining capacity shown in the POWER LED is for reference. The battery level may be significantly changed depending on the printer operation, so charge the battery pack before the battery becomes low.
- The battery pack should be charged at 0°C to 40°C (32°F to 104°F).
- The charging time depends on the ambient temperature and the voltage level of the battery pack. Normally, when using the printer or the battery charger "PWC-A071-A1", it takes about 4 hours to complete charging after running down the battery pack. When using the quad battery charger "PWC-A074-A1", it takes about 5 hours.
- The battery pack, the AC adapter and the car charger may get a little hot when in use. This is normal and not a malfunction.
- After using the battery charger, unplug the AC plug from the outlet. And make sure to remove the battery pack from the battery charger.
- Always use the specified thermal paper. See "23. ACCESSORIES AND CONSUMABLE PARTS" for details.
- DO NOT touch the thermal head directly. Doing so may result in poor printing quality due to the dirt or damage by the static electricity.
- NEVER touch the thermal head, paper sensor, or platen roller directly while opening the paper cover to install the thermal paper. Doing so may cause injury or other accidents.
- The printer has 2 paper cutters on the paper outlet: one is on the printer side, and the other is on the paper cover side.
  DO NOT touch the cutters directly with hands. Especially, make sure not to touch the exposed cutters while the paper cover is open.
- Be careful not to get your fingers or hands caught in the printer when opening or closing the paper cover.
- The AC adapter and the car charger are only for charging. Even when the AC adapter or the car charger is connected to the printer, the printer cannot print without the battery pack.
- Charging the battery pack from the car charger is possible while the car engine is running or accessary power is providing. Ensure that the car battery remaining capacity is sufficient before using the car charger through the accessory power.
- After using the car charger, be sure to unplug the cigar plug from the car accessory socket.
- DO NOT print out during vehicle driving. The ejected thermal paper may hinder the driving of the vehicle.
- DO NOT drop or insert any foreign objects such as clips, pins, and screws in the internal parts or slot of the products.
- DO NOT drop any liquid or spray a solvent to the products.
- NEVER use sharp object such as pen tip to push the switch on the operation panel.
- Make sure not to injure your body or other objects by the plate edge.

- When something goes wrong with the printer during use, stop using it immediately, and remove the battery pack. And then, unplug the AC plug or the cigar plug from the outlet or car accessory socket.
- NEVER disassemble the printer without a serviceman.
- Be sure to close the cover securely to prevent the printer from falling while using the carrying case.
- The carrying case is not intended for use to improve the durability in dropping or the waterproof property.
- If the printer is dropped with the carrying case using, close the paper cover again before using it. The paper cover may be open in the carrying case.

Precautions for Wireless communication

- When using the Bluetooth interface, the communication may become unstable due to the influence from external radio waves. This is based on Bluetooth specification which is a wireless communication standard.
- The Bluetooth model operates in the 2.4 GHz frequency range. The Wireless LAN model using IEEE802.11b/g/n operates in the 2.4 GHz frequency range, and IEEE802.11a/n operates in the 5 GHz frequency range. So if these models are used around other wireless LAN or any equipment using the same frequency range such as a microwave oven, radio frequency interference may occur, and the communication may become unstable. When it happens, turn off the interfering equipment or increase the distance. Alternatively, shorten the distance between the host device and the printer as much as possible.
- When operating the Wireless LAN model using IEEE 802.11a/n, the printer may stop communication temporarily before outputting radio wave to the target channel not to affect the weather radar, air traffic control radar or others. This is to monitor the presence of radar waves for a certain time. If the printer detects radio waves such as radar during operation, it may switch to another channel.

Precautions for maintenance

- Clean the products' cases using a soft and lint-free cloth. DO NOT use alcohol or other solvent.
- Before using, clean the terminals using a dry, soft, and lint-free cloth when they are dirty. If the terminals are dirty, it may cause contact failure.
- When cleaning the thermal head, always wipe it with a cotton swab or other soft material.
- If the carrying case becomes dirty, clean it by a cloth which is moistened with water and wrung out strongly.

Precautions for storing

- Turn off the printer when not in use.
  In addition, when the printer is not used for a long time,
  - Remove the battery pack from the printer. If not, it will cause overdischarge, and the battery pack will not be usable even after it is charged.
  - Unplug the AC plug from the outlet.
  - Set thermal paper to protect the platen.
- When the printer is not used for a long time, store the battery pack in a cool place. Avoid long-term storage in a fully charged state as much as possible because it may shorten the life span of the battery pack.

■ Thermal Paper Handling

- ◆ Store the thermal paper in a cool, dry, and dark place.
- ◆ DO NOT rub the thermal paper with hard objects.
- ◆ DO NOT leave the thermal paper near organic solvents.
- ◆ DO NOT allow PVC film, erasers, or adhesive tape to touch the thermal paper for long periods.
- ◆ DO NOT stack the thermal paper with diazo copies immediately after copying.
- ◆ DO NOT use chemical glue.

■ Precautions on Discarding

When discarding used products, discard them according to the disposal regulations and rules of each district.

■ Notation

The following 2 types of notation are used throughout this manual to denote operating precautions and items to remember besides the symbols shown in "2. SAFETY PRECAUTIONS":

NOTE

◆ Operating Precautions

This box contains items that may lead to a malfunction or deterioration of performance when not followed.

HINT

- Items to Remember

This box contains helpful hints to remember when using the products.

4. PREPARATION

Make sure that the printer and its accessories are contained.
Keep the package and packing materials for future transportation or long-term storage.

Printer

Battery Pack

AC Adapter

Belt Clip

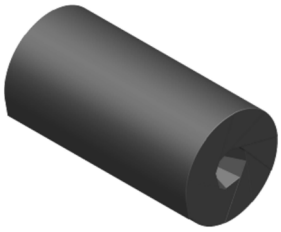

Sample Thermal Paper

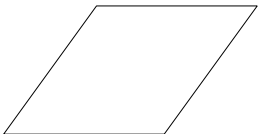

Quick Start Guide

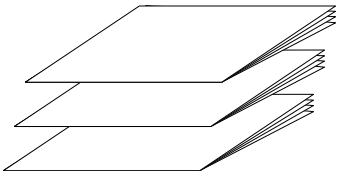

Safety Precautions

The available accessories are shown below.
See "22. SPECIFICATIONS" and "23. ACCESSORIES AND CONSUMABLE PARTS", and be sure to purchase our specified products listed on these references.

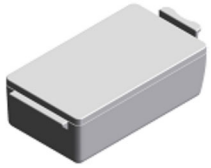

Battery Pack*

Battery Charger

Quad Battery Charger

AC Adapter*

AC Adapter for Quad Battery Charger

AC Cable

Cradle

Car Charger

USB Cable

Shoulder Strap

Strap Attachment

Belt Clip*

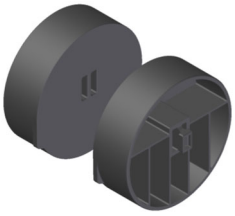

Partition Plate

Carrying Case

*: It is included with the printer at the factory.

5. IDENTIFYING MODEL TYPE

The printer model is identified as follows:

MP-B21L-x46JK1x

Series Name

Interface
- B: Bluetooth + USB
- W: Wireless LAN + USB

Country/Region*
- U: USA, Canada
- E: EU, EFTA, UK, Turkey
- J: Japan

*: The Wireless LAN model only.

6. EACH PART OF PRINTER

1 POWER Switch

The POWER Switch turns the power on or off. The POWER LED lights when turning on the power. To turn off the power, hold down the switch for longer than 1 second.

2 FEED Switch

The FEED Switch operates paper feed. When holding down the switch for a few seconds, the printer feeds the thermal paper continuously for the period of held.
In mark/gap mode, form feed (paper feed until detecting the mark or the gap) is performed by pressing this switch once.

3 ERROR LED

The ERROR LED lights when something is wrong with the printer. For more details, see "7. LED INDICATION OF PRINTER".

4 POWER LED

The POWER LED lights when turning on the power. For more details, see "7. LED INDICATION OF PRINTER".

5 WIRELESS LED

The WIRELESS LED shows the connection state of wireless communication (Bluetooth / Wireless LAN). For more details, see "7. LED INDICATION OF PRINTER".

6 Connector cover

Prevents foreign objects and liquids from entering the power connector and USB connector. Be sure to close the connector cover when the cable is not connected.
When opening the connector cover, rotate it to a position where it does not interfere with the connector part.

7 Power connector

The connector is for charging with the AC adapter or the car charger.

8 USB connector

The connector is for using the USB interface.

9 Paper cover open button

The button is for opening the paper cover.

10 Paper cover

The platen is released from the thermal paper when opening this cover. Open this cover when replacing the thermal paper or cleaning the thermal head.

11 Paper outlet

Thermal paper is ejected from here. Two paper cutters are installed: one is on the printer side, and the other is on the paper cover side (11a, 11b).
Be careful not to touch these paper cutters.

12 Paper holder

The paper holder holds the thermal paper.

13 Thermal head

The thermal head prints data on the thermal paper. NEVER touch the thermal head with hands immediately after printing because it may get hot.

14 Lock arm

The arm moves when opening and closing the paper cover. DO NOT touch because the tip is sharp.

15 Platen

The platen brings the thermal paper into contact with the thermal head. The platen rotates to feed the paper.

16 Paper sensor

The sensor detects thermal paper presence or mark/gap.

17 N mark (Only for MP-B21L-B46JK1)

This mark indicates the position of the NFC tag. By bringing an NFC-enabled terminal to this mark closer, it is easy to connect the terminal and the printer.

18 Battery pack compartment

The battery pack is installed here.

19 Belt clip installation hole

The belt clip or shoulder strap is installed here for carrying the printer.

20 Charging terminal

The terminal is for charging the battery pack from the optional cradle. DO NOT touch this charging terminal.

7. LED INDICATION OF PRINTER

■ LED Indication of Printer

The 3 LEDs of the printer show the printer states.

- ERROR LED and POWER LED : Table 7-1 Printer States
- WIRELESS LED : Table 7-2 Bluetooth / Wireless LAN States Indication

Table 7-1 Printer States

Description	Printer States		ERROR LED		POWER LED	
			Color	Lighting Pattern	Color	Lighting Pattern
Power / Battery states	Power off	Pause	-	Off	-	Off
		Charging (in power off charging mode)*1	-	Off	Orange	On
	Power on	Battery remaining capacity level 1: Full	Shows "Error states"		Green	On
		Battery remaining capacity level 2: Middle			Green	Blink-1
		Battery remaining capacity level 3: Low			Orange	Blink-1
		Battery remaining capacity level 4: Empty			Orange	Blink-5
		Charging (in power on charging mode)			Orange	On
		Charging battery temperature error			Red	Blink-3
		Connected to AC adapter only / car charger only			Green	Blink-4
Error states	Out-of-paper error*2, Paper jam error while detecting mark or gap*2, Gap calibration error, Paper cover open error*2		Red	On	Shows "Power / Battery states"	
	Output buffer full*2		Red	Blink-1		
	Head temperature error*2, Battery temperature error		Red	Blink-2		
	Voltage error, Battery error		Red	Blink-3		
	Hardware error		Red	Blink-2	Red	Blink-2
Operating mode	Initializing		Red	Off	Green	Blink-7
	In rewriting firmware mode		Red	Blink-3	-	Off
	Rewriting firmware*3		Red	Blink-4	-	Off
	Rewriting FLASH memory*4		Red	Blink-4	Shows "Power / Battery states"	
	In function setting mode		-	Off	Red	On
	Gap calibrating		-	Off	Green	Blink-6

*1: When MS1-7 is disabled and the AC adapter or the car charger is connected with the printer off state, the printer is charged in the power off charging mode.
*2: The error state is not shown in the power off charging mode.
*3: Since the printer is rewriting the firmware, do not turn it off while this mode is shown.
*4: Since the printer is rewriting the FLASH memory, do not turn it off while this mode is shown.

Table 7-2 Bluetooth / Wireless LAN States Indication

Wireless Communication States	WIRELESS LED	
	Color	Lighting Pattern
Wireless off*1	-	Off
Connecting	Blue	On
Unconnected	Blue	Blink-2
Initializing wireless communication	Blue	Blink-4
In pairing mode*2	Blue	Blink-3

*1: In the power off charging mode, the wireless is always off.
*2: Only for the Bluetooth model and when its Inquiry Response in the Function Settings is set to Pairing Mode.

Table 7-3 LED Blink Pattern

States	Pattern
Blink-1	
Blink-2	
Blink-3	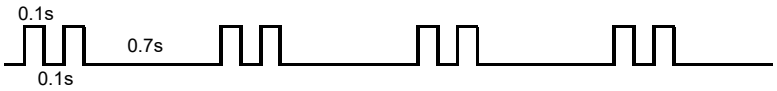
Blink-4	
Blink-5	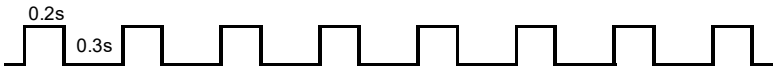
Blink-6	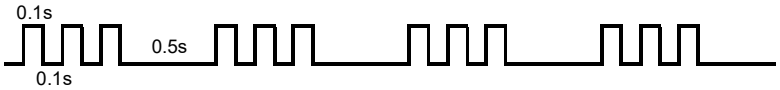
Blink-7	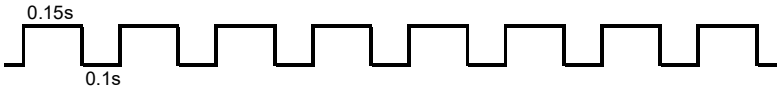

Table 7-4 Guide of Battery Remaining Capacity

Battery States	Battery Remaining Capacity
Battery remaining capacity level 1: Full	Approx. 80%
Battery remaining capacity level 2: Middle	Approx. 40%
Battery remaining capacity level 3: Low*1	Approx. 10%
Battery remaining capacity level 4: Empty*2	Empty

*1: Charge the battery as soon as possible. Or printing may be stopped depending on print contents.
*2: There is not enough remaining capacity to print. Charge the battery.

HINT

- The indicator of battery remaining capacity shown in the POWER LED is for reference. The battery level may be significantly changed depending on the printer operation, so charge the battery pack before the battery becomes low.

■ Error and Recovery Procedure

When an error occurs, the printer stops printing operation. However, the data receiving is enabled. The table below shows errors and their recovery procedures.

Table 7-5 Error and Recovery Procedure

Error	Detail	Recovery Procedure	Priority[*1]
Charging battery temperature error[*2]	The printer suspends charging because the battery pack temperature is out of the operating temperature range (charging).	The printer automatically resumes charging when the battery temperature is within the operating temperature range (charging). Wait for a while in the place where the ambient temperature is 0°C to 40°C (32°F to 104°F).	-
Connected to AC adapter only / car charger only[*2] (Battery pack is not installed)	The printer cannot print because the battery pack is not installed.	Install both the battery pack and the AC adapter, or both the battery pack and the car charger.[*3]	-
Output buffer full	Output buffer of the printer is full.	Read response data from the host device.	1
Out-of-paper error	There is no thermal paper.	Open the paper cover, load the thermal paper, and then close the paper cover.	2
Paper jam error while detecting mark or gap	The mark or the gap cannot be detected.	Select an appropriate detecting method by the memory switch MS6-1 (Sensor Selection) for the marked paper or the label to be used.[*4] When performing the form feed for the label by using the gap detection method, perform the gap calibration.[*5]	
Gap calibration error	The gap is detected incorrectly so that the gap calibration cannot be performed.	Use the specified paper with gap and perform the gap calibration again.[*6]	
Paper cover open error	The paper cover is open.	Close the paper cover.	3
Voltage error	The battery pack voltage is out of the allowable range.	Charge the battery pack.	4
Head temperature error	The thermal head temperature is out of the operating temperature range.	The printer automatically recovers when thermal head temperature is within the operating temperature range. Wait for a while in the place where the ambient temperature is -20°C to 55°C (-4°F to 131°F).	5
Battery temperature error	The battery pack temperature is out of the operating temperature range (printing).	The printer automatically recovers when the battery temperature is within the operating temperature range (printing). Wait for a while in the place where the ambient temperature is -20°C to 55°C (-4°F to 131°F).	6

Error	Detail	Recovery Procedure	Priority*1
Battery error	There is an abnormality in the battery pack.	Remove the battery pack from the printer and install it again. When the terminals are dirty, clean them using a dry, soft, and lint-free cloth. If the problem is unsolved, replace the battery pack.	7
Hardware error	An abnormality occurs in the thermal head or the circuit board.	Recovery is not possible. Request for repair.	8

*1: This indicates the priority when multiple errors occur simultaneously. The bigger number indicates higher priority.
For example, when "Output buffer full" and "Out-of-paper" occur simultaneously, the LED shows "Out-of-paper" which has the higher priority.

*2: When "Charging battery temperature error" or "Connected to AC adapter only / car charger only" occurs, the error is shown by the POWER LED.
If the error occurs simultaneously with another error, the errors are shown by POWER LED and ERROR LED respectively.

*3: The AC adapter and the car charger are only for charging. Connect according to "Charging from Printer and AC Adapter" of "16. CHARGING BATTERY PACK" and "Charging from Printer and Car Charger" of "18. CHARGING FROM CAR CHARGER".

*4: See "24. MS SETTINGS LIST" for the MS setting contents.

*5: See "10. GAP CALIBRATION (ONLY FOR LABEL)" for the gap calibration.

*6: See "23. ACCESSORIES AND CONSUMABLE PARTS" for the specified label.

8. INSTALLING BATTERY PACK

To supply power to the printer, use the battery pack.
The AC adapter and the car charger are only for charging. Even when the AC adapter or the car charger is connected to the printer, the printer cannot print without the battery pack.
For connecting the AC adapter, see "16. CHARGING BATTERY PACK".
And for connecting the car charger, see "18. CHARGING FROM CAR CHARGER“.
The battery pack and the AC adapter are included with the printer at the factory, but they are also available as optional accessories. See "22. SPECIFICATIONS" and "23. ACCESSORIES AND CONSUMABLE PARTS", and be sure to purchase our specified accessories listed on these references.

■ Installing/Removing Battery Pack

NOTE

- ◆ Make sure to turn off the printer when installing/removing the battery pack.
- ◆ If the battery pack is removed while saving the registration data by registration command or the setting content by function setting command, the data may be lost.
- ◆ When the printer is not used for a long time, remove the battery pack from the printer.
- ◆ See "2. SAFETY PRECAUTIONS" and "3. OPERATING PRECAUTIONS" for the precautions of the battery pack.

This product is shipped with a battery pack installed. An insulation sheet is attached to the battery pack to prevent power from being applied to the printer inside the packaging box. Please refer to the method below to remove the battery pack and peel off the insulation sheet from the battery pack before use.

Removing Battery Pack

(1) Turn off the printer.

(2) As shown in Figure 8-1, pressing the lever "c" of the battery pack in the direction of the arrow 1, remove it by pulling up in the direction of the arrow 2.

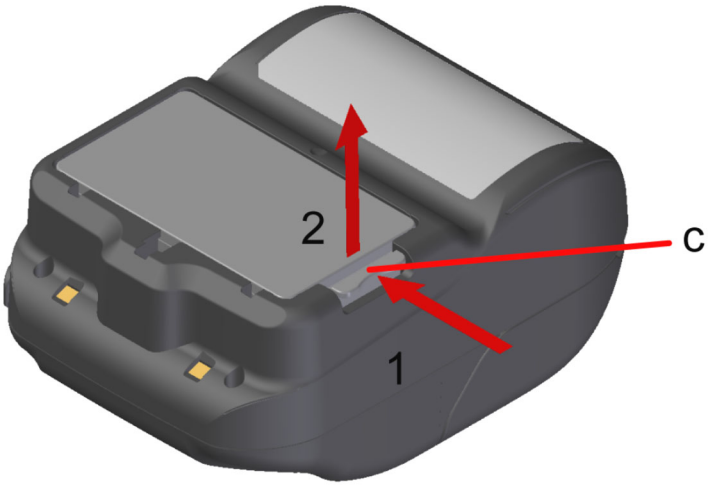

Figure 8-1 Removing Battery Pack

Installing Battery Pack

The battery pack is installed to the printer in the direction as shown in Figure 8-2.
The battery pack cannot be installed if inserted in the wrong direction.

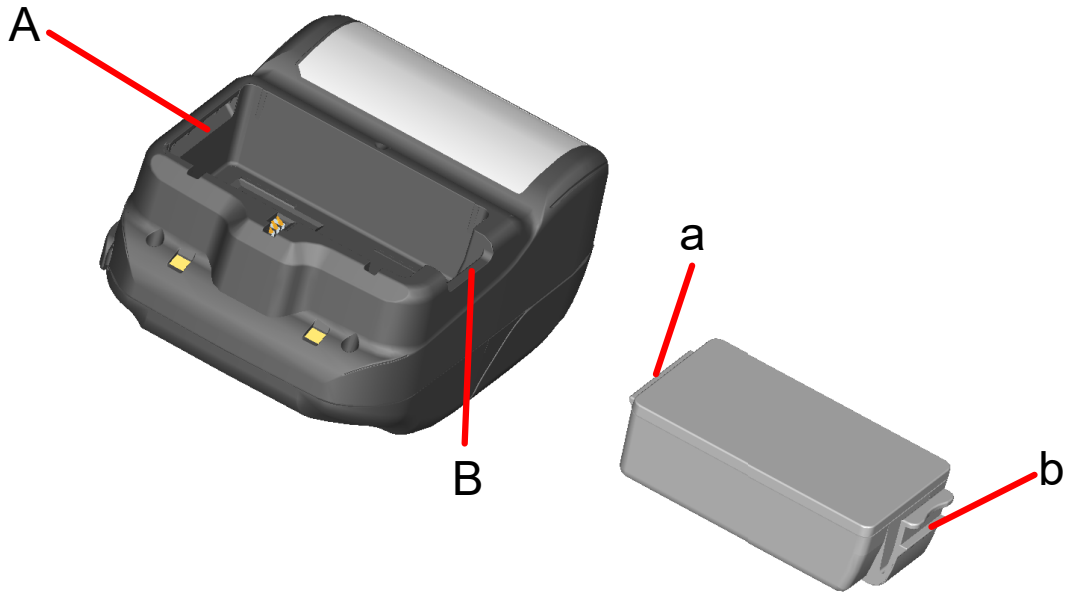

Figure 8-2 Battery Pack Orientation

(1) Ensure that the printer is off.

(2) Insert the tab "a" of the battery pack into the groove "A" of the printer.

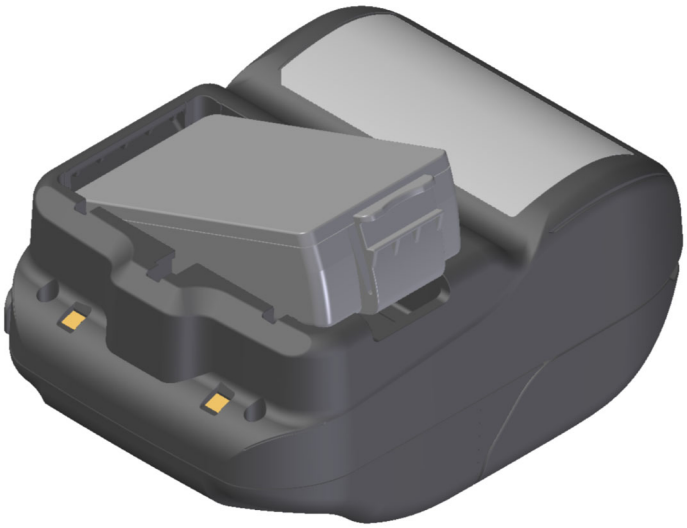

Figure 8-3 Installing Battery Pack (1)

(3) Press the battery pack in the direction of the arrow in Figure 8-4 until the tab "b" of the battery pack is locked into the groove "B" of the printer.

Figure 8-4 Installing Battery Pack (2)

(4) Make sure that the battery pack is installed in the printer correctly.

- Ensure the tab "a" of the battery pack is inserted under the groove "A" of the printer.
- Ensure the tab "b" of the battery pack is locked in the groove "B" of the printer.

HINT

- The battery pack may get a little hot when in use. This is normal and not a malfunction.
- If the usable time of the battery pack has become shorter significantly, the battery is at the end of life. Please purchase a new battery pack.
- When the battery pack is used at low temperature, the usable operating time of the printer may be shortened.
- The battery may deteriorate even if not used.
- When Auto Power Off Setting is set to Enable, the printer is automatically turned off after not operated for the set time, and this can prevent the useless consumption of the battery. For details, see "12. FUNCTION SETTINGS".
- Dispose the used or unnecessary batteries according to local regulations.

9. LOADING THERMAL PAPER

The printer uses the thermal paper roll (hereinafter referred to as thermal paper).
Use the thermal paper with printing surface rolled outwards.
The function settings of the printer differ depending on the thermal paper. See "12. FUNCTION SETTINGS" for details.

■ How to Load Thermal Paper

(1) Press the paper cover open button in the direction of the arrow shown in Figure 9-1, and open the paper cover.

Figure 9-1 Paper Cover Open Button

NOTE

◆ Press the paper cover open button to the end.
If not, the paper cover may not open.

(2) Load the thermal paper into the paper holder with its printing surface facing to the thermal head.
If the setting direction is wrong, the printer cannot print.

Figure 9-2 Thermal Paper Setting Direction

NOTE

- The printer has 2 paper cutters on the paper outlet: one is on the printer side, and the other is on the paper cover side. Be careful not to cut your fingers by the paper cutters when loading the thermal paper.
- NEVER touch the thermal head immediately after printing because it may get hot.
- DO NOT touch the gear of the platen and/or the gear of the printer. Doing so may cause loss of printing quality or damage.

(3) Pull out the thermal paper straight until the tip of the thermal paper appears 5 cm or longer from the paper outlet.
Make sure that the thermal paper does not slant.

Figure 9-3 Thermal Paper Setting State

NOTE

- If the thermal paper is loaded into the paper holder at an angle, the thermal paper may not be ejected straight. If so, load the thermal paper correctly.

(4) Push firmly the center of the paper cover (the arrow in Figure 9-4) to close the paper cover.

Figure 9-4 Paper Cover

(5) When the marked paper or label is used, set MS1-2 (Mark/Gap Mode Selection) to Enable. See "12. FUNCTION SETTINGS" for details of the setting.
In addition, press the FEED Switch once to perform form feed (paper feed until detecting the mark or the gap).

NOTE

- ◆ When the paper cover is closed, the top of thermal paper may be colored because of the friction with a part of the printer. In that case, feed the thermal paper and cut the top of the colored thermal paper before starting printing.
- ◆ DO NOT cover the paper outlet or hold down the thermal paper ejected. Doing so may cause a paper jam.

HINT

- Leaving the printer with the thermal paper for a long time may cause a paper feeding problem because the surface of the thermal paper sticks to the thermal head due to the environmental changes. In that case, open the paper cover to separate the thermal paper from the thermal head, and then close the paper cover before use.

■ Thermal Paper Shape

Always use the specified thermal paper. See "23. ACCESSORIES AND CONSUMABLE PARTS" for details.

NOTE

- ◆ Use the thermal paper whose maximum external diameter is ϕ51 mm or less.
- ◆ Use the paper roll whose maximum width is equal or less than +0.5 mm including winding deviation.
- ◆ DO NOT use the thermal paper whose end is glued or taped.
- ◆ Use the thermal paper whose inner diameter of the core is ϕ8 mm or more.

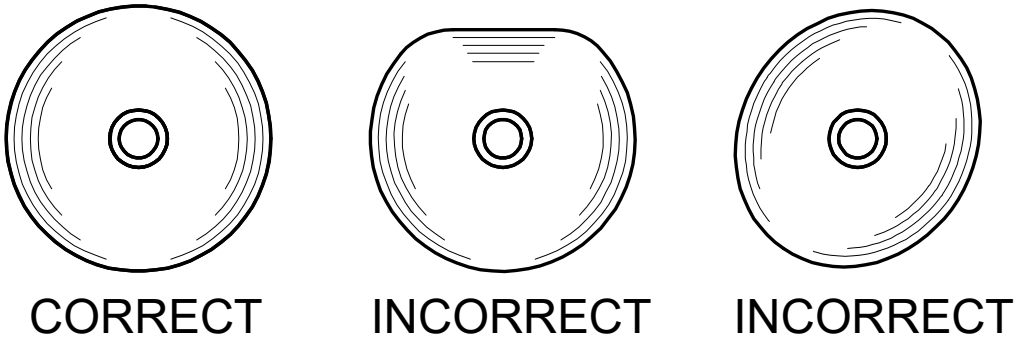

NOTE

- ◆ DO NOT use deformed thermal paper. Doing so may cause the printer damaged.

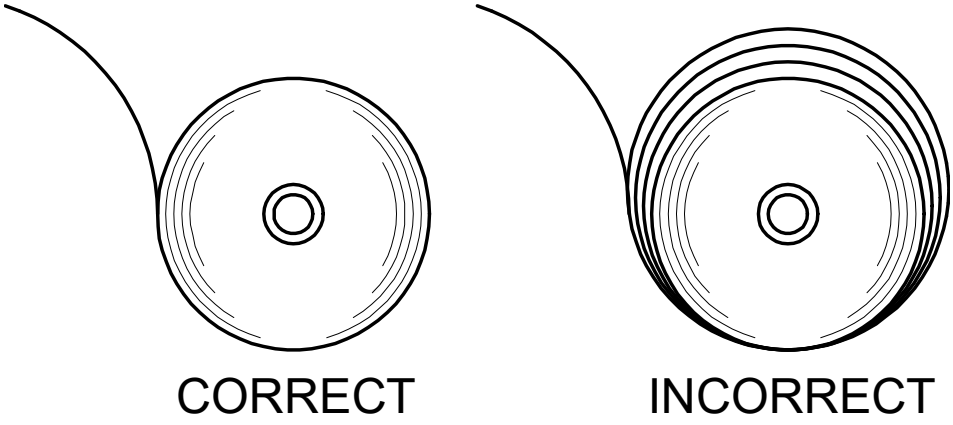

NOTE

- ◆ In the case of using loosened thermal paper roll, rewind the roll before using it.

10. GAP CALIBRATION (ONLY FOR LABEL)

When performing the form feed for the label by using the gap detection method, perform the gap calibration at first. If the gap calibration is not performed, the form feed (gap detection) or the out-of-paper detection may not be performed appropriately.

■ Gap Calibration

(1) Set the memory switch MS1-2 (Mark/Gap Mode Selection) to "Enable" and the memory switch MS6-1 (Sensor Selection) to "Gap Sensor Selection".
See "24. MS SETTINGS LIST" for the MS setting contents.

(2) Set the label, and press the POWER Switch repeatedly 5 times within 3 seconds.

(3) POWER LED changes to green blink-6 and starts to perform the gap calibration.

HINT

- During the gap calibration, feeds the paper for 3 to 4 labels.
- Once the gap calibration is completed, the POWER LED returns to the indication of its original state.
- When the gap calibration is failed, the ERROR LED indicates the error status.
  See "7. LED INDICATION OF PRINTER" for the state of the gap calibration or the error state.
- Pressing the FEED Switch during the gap calibration cancels the gap calibration.

When the gap calibration succeeds, MS28 (Gap Detection Threshold) is set automatically.
The set threshold is held even if the power turns off.
In normal cases, set MS28 (Gap Detection Threshold) automatically by using the gap calibration.

Perform the gap calibration in the following cases.

- The type of label is changed.
- The memory switch setting is reset to the default in function setting mode or the software.*
- Form feed is not performed correctly.

*: The memory switch can also be set from software. Download software from the download page listed on the rear cover.
The following software can be set.
・For Windows: "SII Printer Setting Utility" included in "SII Mobile Printer Software for Windows"
・For iOS and Android: App "SII Printer Utility" provided by App Store or Google Play

11. TEST PRINT

The printer can perform a test print.
In the test print, the firmware version, setting values of the function settings, etc. are printed.

■ Test Print Procedure : Bluetooth Model

(1) Install the thermal paper in the printer as instructed in "9. LOADING THERMAL PAPER". Ensure that no error occurs, and then turn off the printer.

(2) Hold the FEED Switch down and press the POWER Switch, then release the POWER Switch. Release the FEED Switch when the test print has been started.

```
Thermal Printer
MP-B21L [ Ver X.XX.XX ]
  DD.MMM.YYYY
Copyright(C):SII

* MS1 *
1)  Interface:USB/Wireless
2)  Mark/Gap Mode:Disable
3-5)Command System:ESC/POS
6)  Error Through:Enable
7)  Auto Activation by AC:
     Disable
8)  Response Data Discarding:
     Disable

* MS2 *
1)  Paper Set Handle:None
2)  Realtime Command:Enable
3-4)Print Quality:Standard
5-6)LED Brightness:Level 4
7)  SW Paper Form Feed:
     Cut Position
8)  Paper Width:Normal

* MS3 *
1-8)Print Width:48[mm]

* MS4 *
1-8)Print Density:100[%]

* MS5 *
1-8)Thermal Paper:TF50KS-EY

* MS6 *
1)  Sensor Select:Mark

* MS7-8 *
Auto Power Off Time:0[sec]

* MS9 *
1)  Auto Status Back:Enable
2)  Init. Response:Enable

* MS13 *
1)  Kanji Code:JIS Code
2)  Reverse Function:Disable

* USB Communication *
 USB Device Class:Printer

* Bluetooth Communication *
Printer Name:MP-B21L
Address:     XX:XX:XX:XX:XX:XX
Auto Connection: Enable
Inquiry Response:Pairing Mode

* Font Information *
 JIS X 0208-1997 Font Exist
 Gaiji Font enable
 Down-load Font enable
 Character Code Table:
     Code Page 437
 International Character:
     USA

* Serial Number Information *
 XXXXXXXXXX
```

Figure 11-1 Test Print Sample (Bluetooth Model)

```
* Bluetooth Communication *
Printer Name:     MP-B21L
Address:          XX:XX:XX:XX:XX:XX
Auto Connection:  Enable
Inquiry Response: Pairing Mode
```

Figure 11-2
Bluetooth Information Print Sample

Table 11-1
Bluetooth Information

Item	Description
Printer Name	Printer Name
Address	Bluetooth Address
Auto Connection	Selected iOS Auto Connection
Inquiry Response	Selected Inquiry Response

(3) A message of mode selection is printed as shown in Figure 11-3 when the test print has completed. To return to the print-ready states, select "0 : Normal Mode".
To select other modes, press the FEED Switch the number of times corresponding to the selected mode number, and then press the POWER Switch.

```
[Mode Select]
0 : Normal Mode
1 : Setting Mode
2 : Wireless ON/OFF Mode
3 : Hex Dump Mode
4 : Print ZPL II Information
Press the FEED switch an equal
number of times to the selected
number. After that, press the
POWER SW.
```

・ "4 : Print ZPL II Information" is printed only when ZPL II is selected in Command System Selection (MS1-3 to 5).

Figure 11-3 Mode Selection Message (Bluetooth Model)

■ Test Print Procedure: Wireless LAN Model

(1) Install the thermal paper in the printer as instructed in "9. LOADING THERMAL PAPER". Ensure that no error occurs, and then turn off the printer.

(2) Hold the FEED Switch down and press the POWER Switch, then release the POWER Switch. Release the FEED Switch when the test print has been started.

```
Thermal Printer
MP-B21L [ Ver X.XX.XX ]
  DD.MMM.YYYY
Copyright(C):SII

* MS1 *
1)  Interface:USB/Wireless
2)  Mark/Gap Mode:Disable
3-5)Command System:ESC/POS
6)  Error Through:Enable
7)  Auto Activation by AC:
     Disable
8)  Response Data Discarding:
     Disable

* MS2 *
1)  Paper Set Handle:None
2)  Realtime Command:Enable
3-4)Print Quality:Standard
5-6)LED Brightness:Level 4
7)  SW Paper Form Feed:
     Cut Position
8)  Paper Width:Normal

* MS3 *
1-8)Print Width:48[mm]

* MS4 *
1-8)Print Density:100[%]

* MS5 *
1-8)Thermal Paper:TF50KS-EY

* MS6 *
1)  Sensor Select:Mark

* MS7-8 *
Auto Power Off Time:0[sec]

* MS9 *
1)  Auto Status Back:Enable
2)  Init. Response:Enable

* MS13 *
1)  Kanji Code:JIS Code
2)  Reverse Function:Disable

* USB Communication *
 USB Device Class:Printer

* Font Information *
 Gaiji Font enable
 Down-load Font enable
 Character Code Table:
     Code Page 437
 International Character:
     USA

* Serial Number Information *
 XXXXXXXXXX
```

Figure 11-4 Test Print Sample (Wireless LAN Model)

(3) A message of mode selection is printed as shown in Figure 11-5 when the test print has completed. To print Wireless LAN information, select "4 : Print WLAN Information". (Press the FEED Switch 4 times, and then press the POWER Switch once.)
The printer starts preparation for printing Wireless LAN information.

```
[Mode Select]
0 : Normal Mode
1 : Setting Mode
2 : Wireless ON/OFF Mode
3 : Hex Dump Mode
4 : Print WLAN Information
5 : Print ZPL II Information
Press the FEED switch an equal
number of times to the selected
number. After that, press the
POWER SW.
```

・ "5 : Print ZPL II Information" is printed only when ZPL II is selected in Command System Selection (MS1-3 to 5).

Figure 11-5 Mode Selection Message (Wireless LAN Model)

(4) The information acquisition message in Figure 11-6 is printed until the printing of Wireless LAN information starts.

```
Getting WLAN information. Please wait...
```

Figure 11-6 Wireless LAN Information Acquisition Message

After completing acquisition Wireless LAN information, Wireless LAN information is printed as a sample shown in Figure 11-7.

```
* WLAN Communication *
Mode:              Simple AP
Radio:             802.11b/g/n
Country:           US
Channel:           Auto
SSID:              SII-Printer
Security:          None
MAC Address:       XX:XX:XX:XX:XX:XX
IP Address:        192.168.0.1
Subnet Mask:       255.255.255.0
Default Gateway:   0.0.0.0
Module Ver.:       XX.XX
```

Figure 11-7 Wireless LAN Information Print Example

Table 11-2 Wireless LAN Information

Item	Description
Mode	Selected Wireless LAN Operation Mode
Radio	Selected Wireless LAN Standard
Country	Corresponding country US: USA, Canada JP: Japan EU: EU, EFTA, UK, Turkey
Channel	Selected Channel
SSID	SSID Setting
Security	Selected Security
DHCP	Selected DHCP Client Mode (in Client Mode)
MAC Address	MAC Address
IP Address	IP Address*
Subnet Mask	Subnet Mask*
Default Gateway	Gateway Address*

*: When Client Mode is selected in the Mode, IP address, Subnet Mask and Gateway Address obtained from DHCP Server are printed. When the Power SW is pressed and canceled data queue, "---,---,---,---" is printed. In case of DHCP timeout, the Setting value is used and printed.

(5) A message of mode selection is printed as shown in Figure 11-5 when the Wireless LAN information printing has completed.
To return to the print-ready state, select "0 : Normal Mode".
To select other modes, press the FEED Switch the number of times corresponding to the selected mode number, and then press the POWER Switch.

12. FUNCTION SETTINGS

This printer can set various functions according to use conditions and intended use.
The setting contents are stored in the Memory Switch (hereinafter referred to as MS) in the FLASH memory mounted in the printer, and it is possible to set MS by using the switches, the software, or command input.
This section describes the setting procedure by using the switches.
See "24. MS SETTINGS LIST" for the MS setting contents.

NOTE

◆ Be sure to set the value as instructed when "Fixed" is stated for 0 or 1 in the table. Otherwise, the printer may not work correctly or may crash.

HINT

- When neither switch is pressed within 2 minutes after the message is printed, the printer exits the Setting Mode and returns to the print-ready state.
- The memory switch can also be set from software. Download software from the download page listed on the rear cover. The following software can be set.
  - ・For Windows:
    "SII Printer Setting Utility" included in "SII Mobile Printer Software for Windows"
  - ・For iOS and Android:
    App "SII Printer Utility" provided by App Store or Google Play

■ Procedure for Setting Functions Using Switches

To set the functions using the switches, set the printer in the Setting Mode.
To enter the Setting Mode, follow the procedure below.

(1) Load the thermal paper in the printer as instructed in "9. LOADING THERMAL PAPER". Ensure that no error occurs, and then turn off the printer.
See "7. LED INDICATION OF PRINTER" for the error state.

(2) Hold the FEED Switch down and press the POWER Switch, then release the POWER Switch. Release the FEED Switch when the test print has been started.

(3) A message of mode selection is printed as shown in Figure 12-1 when the test print has completed.
To enter the Setting Mode, select "1 : Setting Mode". (Press the FEED Switch once, and then press the POWER Switch.)

```
[Mode Select]
0 : Normal Mode
1 : Setting Mode
2 : Wireless ON/OFF Mode
3 : Hex Dump Mode
4 : Print WLAN Information
Press the FEED switch an equal
number of times to the selected
number. After that, press the
POWER SW.
```

・"4 : Print WLAN Information" is printed only for the Wireless LAN model.
・When pressing the FEED Switch once, "1 : Setting Mode" is selected.
・When pressing the POWER Switch without pressing the FEED Switch, "0 : Normal Mode" is selected.

Figure 12-1 Mode Selection Message

(4) A message for selecting MS to be set is printed as shown in Figure 12-2 when the printer enters the Setting Mode.
Press the FEED Switch the number of times corresponding to the selected MS number, and then press the POWER Switch.

```
[MS Selection]
0 : Exit
1 : MS1
2 : MS2
3 : MS3
4 : MS4
5 : MS5
6 : MS6
7 : MS7,8
8 : MS9
9 : MS13
10: I/F Setting
11: USB Setting
12: International Character
13: Default Setting
Press the FEED switch an equal
number of times to the selected
number. After that, press the
POWER SW.
```

・"10: I/F Setting" is printed for Bluetooth model only.
Select this to set Bluetooth connection.
・When pressing the FEED Switch once, "1 : MS1" is selected.
・When pressing the POWER Switch without pressing the FEED Switch, "0: Exit" is selected.
・To return to the default, select "13: Default Setting".

Figure 12-2 MS Selection Message

(5) A message for selecting the function assigned to the selected MS is printed as a sample shown in Figure 12-3.
Press the FEED Switch the number of times corresponding to the selected function number, and then press the POWER Switch.

```
[Function selection of MS1]
0 : Return to MS selection
1 : Interface
2 : Mark/Gap Mode
3 : Command System
4 : Error Through
5 : Auto Activation by AC
6 : Response Data Discarding
Press the FEED switch an equal
number of times to the selected
number. After that, press the
POWER SW.
```

・When pressing the FEED Switch 4 times, "4 : Error Through" is selected.
・When pressing the POWER Switch without pressing the FEED Switch, "0 : Return to MS Selection" is selected.

Figure 12-3 Function Selection Message (Example: Selected MS1)

(6) A message for selecting the setting value of the selected function is printed as a sample shown in Figure 12-4.
Press the FEED Switch the number of times corresponding to the selected setting value number, and then press the POWER Switch.

```
[Error Through]
0 : Return to function
    selection
1 : Enable
2 : Disable
Press the FEED switch an equal
number of times to the selected
number. After that, press the
POWER SW.
```

・When pressing the FEED Switch once, "1 : Enable" is selected.

Figure 12-4 Setting Value Selection Message (Example: Selected Error Through)

(7) A message for confirming the selected setting value is printed as a sample shown in Figure 12-5.

```
[Error Through]
Set Enable
Save setting    : Feed SW
Discard setting : Power SW
```

Figure 12-5 Setting Value Confirmation Message (Example: Selected Enable)

Press the FEED Switch to save the setting value to the memory. Figure 12-2 is printed.

Press the POWER Switch to discard the selected item. A message of the function selection is printed as a sample shown in Figure 12-3. If select "0 : Return to MS Selection" there, function selection is not performed, and Figure 12-2 is printed.

To continue to set functions, return to (4).

(8) To exit the Setting Mode, select "0 : Exit" in Figure 12-2Figure 12-2 MS Selection Message. The test print and Figure 12-1 printing start again. Verify that the functions are properly set.

To return to the print-ready state, select "0 : Normal Mode" in Mode Selection Message.

To set functions again, return to (3).

13. CONNECTING TO HOST DEVICE

The printer supports the USB interface and the Bluetooth interface or Wireless LAN interface.
Selecting Bluetooth interface or Wireless LAN interface depends on the model.
Order the model of communication method to use from the following.

- Bluetooth model (MP-B21L-Bxxxxxx) : Bluetooth interface + USB interface
- Wireless LAN model (MP-B21L-Wxxxxxx) : Wireless LAN interface + USB interface

The communication speed may be decreased depending on processing by software or print contents.

The interface is required to be set to USB in places where emitting radio waves is prohibited.
To temporarily switch the interface, press the POWER Switch 3 times within 3 seconds while the printer is on.
The WIRELESS LED lights on or blinks when wireless communication is enabled.
The WIRELESS LED lights off when wireless communication is disabled.

■ USB Interface

(1) Ensure that the printer is off.

(2) Open the connector cover of the printer, and connect the USB cable plug to the USB connector as shown in Figure 13-1.

Figure 13-1 Printer and USB Cable Connection

(3) Turn on the printer, and send data from the host device to the printer.

(4) Verify that the data is printed correctly.

NOTE

- When connecting the USB cable to the USB connector, push the plug to the end.
- When connecting or disconnecting the cable, hold the plug. Never pull the cable.
- Be sure to close the connector cover when the cable is not connected.

■ Bluetooth Interface

(1) When the USB cable is connected to the printer, disconnect it from the printer.

(2) Turn on the printer and pair it with the host device.
In addition, by using the NFC (Near Field Communication Technology) tag built in the printer, automatic pairing between an NFC-enabled Android device and a printer is possible.

NOTE

◆ Application for inter-device communication needs to be added to the Android device separately.

(3) In the factory state, the printer enters pairing mode for about 60 seconds by pressing the POWER Switch for 8 seconds or more with the printer off state. In the pairing mode, the WIRELESS LED blinks twice per second. In this period, pair the printer with the host device.
Pairing is conducted by SSP (Simple Secure Pairing), however, PIN code is used when the host device does not support SSP. The PIN code is "0000" at the factory.

(4) Conduct Bluetooth connection with the host device.
After the Bluetooth connection is established, the WIRELESS LED lights up.

(5) Check the communication states on the host device.

(6) Send data from the host device, and verify that the data is printed correctly.

⚠WARNING

◆ The printer may affect medical or other electronic devices. Obtain information and data concerning influence due to radio interference from the respective manufacturers or dealers.
◆ When using the printer in medical institutions, follow their guidelines.
◆ DO NOT use the printer in areas or zones where its use is prohibited.

HINT

- The distance of communication is approximately 10 m. However, the distance may differ depending on the radio interference and environment.
- For Android device, pairing is possible using NFC.
  In that case, the Android app provided by us is required.
  Download the Android app "SII Printer Utility" from Google Play, and install it on a host device.
  Refer to the following for the pairing procedure when using the "SII Printer Utility".
- Pairing procedure using NFC
  Set the Bluetooth function and NFC function of host device to on, and start the "SII Printer Utility".
  In the "Selected device" field, tap [Device not selected] or the device to be selected.
  Tap "NFC search" in the "Device Search" field.
  Turn on the printer, and bring the NFC antenna of host device closer to the position of N mark on the printer.
  Pairing is started.

■ Wireless LAN Interface

(1) When the USB cable is connected to the printer, disconnect it from the printer.

(2) Turn on the printer and connect it to the host device wirelessly.
In the factory state, the settings are as follows:

Mode	: Simple AP (simple access point)
Standard	: IEEE802.11b/g/n (2.4GHz frequency range)
SSID	: SII-Printer
Security	: None
IP address for the printer	: 192.168.0.1

(3) View the page "http://192.168.0.1" from the Web browser.
The printer setting screen is displayed. Make necessary settings.
These settings are enabled after rebooting.

(4) Check the communication state on the host device.

(5) Send data from the host device, and verify that the data is printed correctly.

⚠WARNING

- ◆ The printer may affect medical or other electronic devices. Obtain information and data concerning influence due to radio interference from the respective manufacturers or dealers.
- ◆ When using the printer in medical institutions, follow their guidelines.
- ◆ DO NOT use the printer in areas or zones where its use is prohibited.

14. PAPER WIDTH SETTING

This printer can use thermal paper of less than 58 mm in width by installing the partition plate.
・The minimum supported paper width is 25.4 mm.
・Receipts are only available with a paper width of 58 mm.
The partition plate is optional accessories. Please contact your SII sales representative if you need it.
The configuration of the partition plate come in a set of two. Two of them are enclosed at the purchase, so that install both of them to use the printer.

■ Installing Partition Plate

The method of installing the partition plate is the same for all paper widths as shown below.

(1) Install the part "d" of the partition plate on the part "D" of the printer in the direction of the arrow shown in Figure 14-1 (common for left and right).

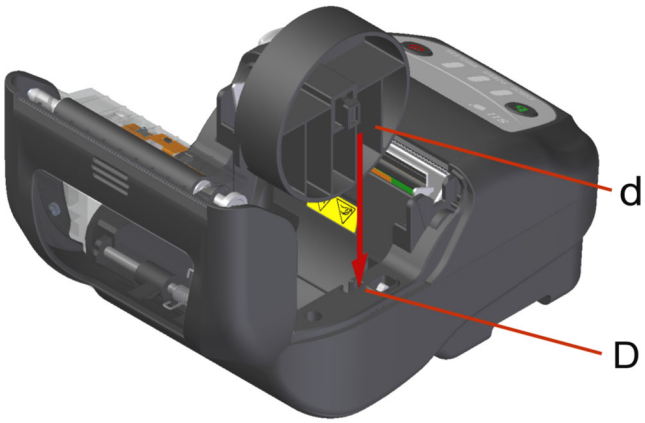

Figure 14-1 Installing Partition Plate

NOTE

- ◆ The printer has 2 paper cutters on the paper outlet: one is on the printer side, and the other is on the paper cover side. When installing/removing the partition plate, be careful not to cut your fingers by the paper cutters.
- ◆ Set the paper width before using the printer for the first time. DO NOT change the paper width after starting to use the printer. Doing so may damage the printer.
- ◆ When the thermal paper smaller than 58 mm in width is used using the partition plate, rubber crumbs of the platen may be generated because the platen contacts with the thermal head. Remove rubber crumbs regularly to maintain the printing quality.

15. INSTALLING BELT CLIP / SHOULDER STRAP

The belt clip and the shoulder strap convenient for carrying the printer can be attached to this printer. The belt clip is included with the printer at the factory, but is also available as an optional accessory. The shoulder strap and the strap attachment are optional accessories. See "23. ACCESSORIES AND CONSUMABLE PARTS", and be sure to purchase our specified accessories listed on the reference.

■ Installing Belt Clip

(1) Turn off the printer.

(2) Remove the battery pack from the printer.
When the AC adapter is connected, unplug the AC plug of the AC adapter from the outlet.

(3) Insert the part "f" of the belt clip into the hole "F" of the printer in the direction of the arrow as shown in Figure 15-1.
The belt clip cannot be installed if inserted in the wrong direction.

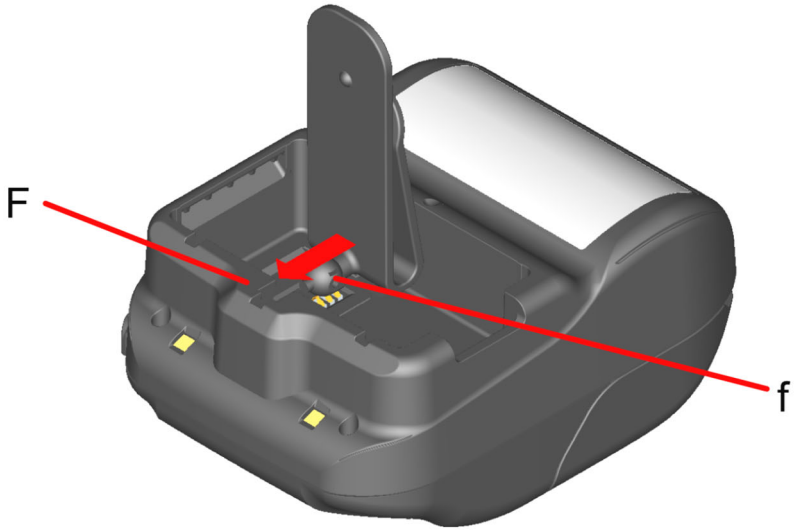

Figure 15-1 Installing Belt Clip (1)

(4) Rotate the belt clip 90 degrees and level it.

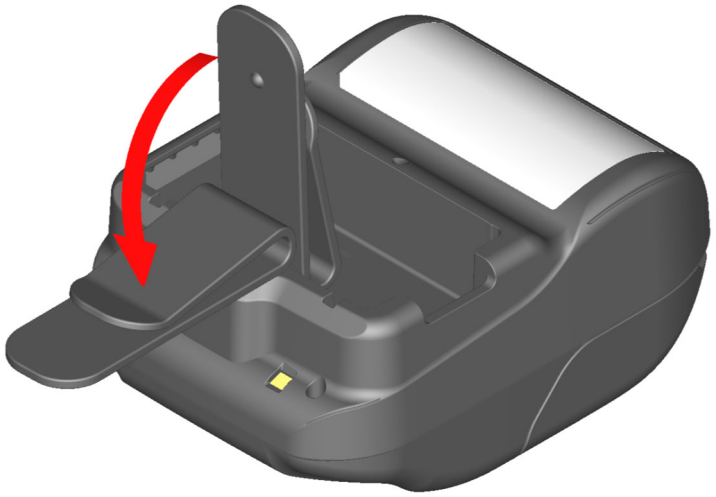

Figure 15-2 Installing Belt Clip (2)

(5) Install the battery pack in the printer.

Figure 15-3 Installing Belt Clip (3)

(6) Rotate the belt clip 180 degrees.

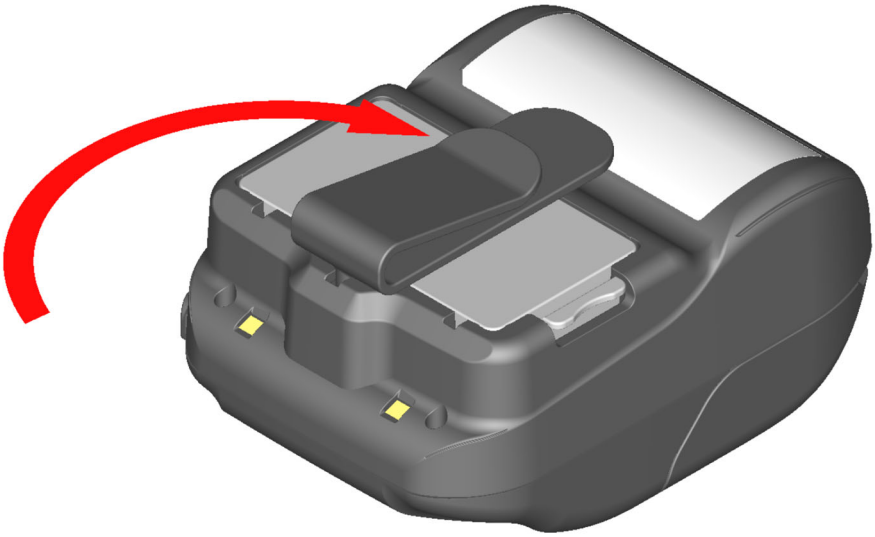

Figure 15-4 Installing Belt Clip (4)

NOTE

- When using the belt clip, be sure to install the battery pack in the printer because the belt clip comes off easily from the printer and the printer drops. Dropped printer may cause personal injury or malfunction.
- Avoid the direct skin contact with the battery pack while using the belt clip. Prolonged skin contact may cause low-temperature burns.

■ Installing Shoulder Strap

(1) Install the strap attachment to the belt clip attachment part.

Figure 15-5 Installing Shoulder Strap (1)

(2) Install the battery pack and fix the strap attachment.

Figure 15-6 Installing Shoulder Strap (2)

(3) Pass the tip of shoulder strap through the mounting hole of the strap attachment and pass the folded tip through the ring as shown in Figure 15-7.

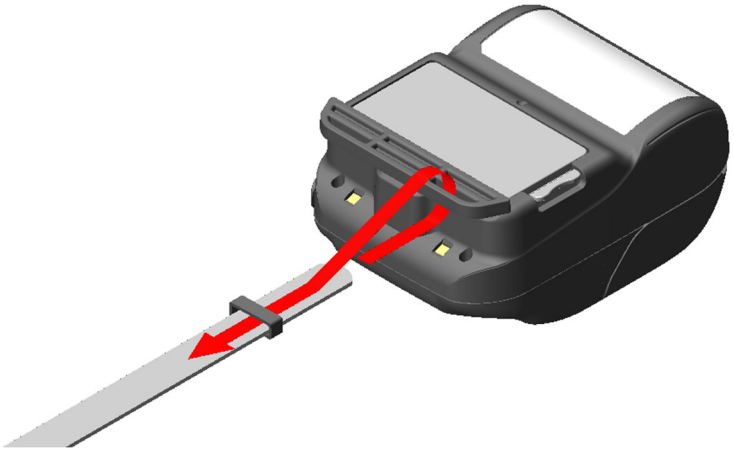

Figure 15-7 Installing Shoulder Strap (3)

(4) Pass the tip of shoulder strap through the adjuster hole.

Figure 15-8 Installing Shoulder Strap (4)

(5) As shown in Figure 15-9, install the other side in the same procedure described (3) to (4).

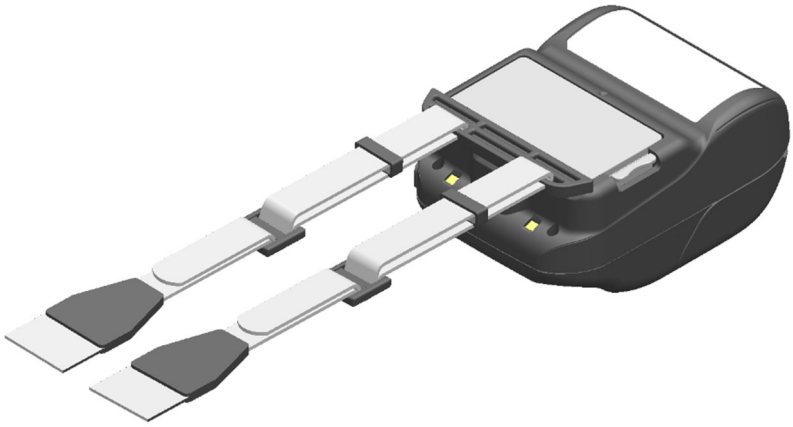

Figure 15-9 Installing Shoulder Strap (5)

NOTE

- Be sure to install the shoulder strap to the printer securely when using it. Dropped printer may cause personal injury or malfunction.
- Avoid the direct skin contact with the battery pack while using the shoulder strap. Prolonged skin contact may cause low-temperature burns.

16. CHARGING BATTERY PACK

The battery pack can be charged using the printer, cradle or battery charger.

From Printer

- Charged from an AC power supply using the AC adapter.
- Charged from an accessory socket of a car using the car charger.

From Cradle

- Charged from an AC power supply using the AC adapter.

From Battery Charger

- Charged from an AC power supply using the AC adapter.

This chapter describes how to charge from an AC power supply by the printer using the AC adapter.
See "17. CHARGING FROM CRADLE" for the charging method by the cradle.
See "18. CHARGING FROM CAR CHARGER" for the charging method by the car charger.
See "19. CHARGING FROM BATTERY CHARGER" for the charging method by the battery charger.
The battery pack is partially charged prior to shipping and provides sufficient power to check the printer operation. To use the printer for an extended time, fully charge the battery pack.
This battery pack does not need to be used up or discharged before charging.
The battery pack and the AC adapter are included with the printer at the factory, but are also available as optional accessories. See "22. SPECIFICATIONS" and "23. ACCESSORIES AND CONSUMABLE PARTS", and be sure to purchase our specified accessories listed on these references.

NOTE

- ◆ DO NOT remove the battery pack during charging.
- ◆ The battery pack should be charged at 0°C to 40°C (32°F to 104°F).

■ Charging from Printer and AC Adapter

The AC adapter is only for charging. Even when the AC adapter is connected to the printer, the printer cannot print without the battery pack.
Depending on the state of the power supply at the start of charging, the battery pack can be charged in 2 modes.

- Power on charging mode: It is a mode to start charging from the printer on state. Communication and printing can be performed in charging.
- Power off charging mode: It is a mode to start charging from the printer off state. Only charging is performed, and all the functions such as communication and printing are stopped.

For the battery remaining capacity and the error state, see "7. LED INDICATION OF PRINTER".
Select the mode depending on the procedure.

Charging in Power On Charging Mode

Before connecting the AC adapter, the battery pack should be installed in the printer and the printer is turned on.

(1) Install the battery pack in the printer.

(2) Turn on the POWER Switch.
The POWER LED shows the battery remaining capacity.

(3) Open the connector cover of the printer, and plug the DC plug of the AC adapter to the power connector of the printer.

(4) Plug the AC plug of the AC adapter to an outlet.

(5) Charging starts in the power on charging mode.
During charging, the POWER LED lights in steady orange.

(6) When charging is successfully complete to full charge, the POWER LED turns to steady green.
The printer maintains the power on state.
In case that a battery error occurs during charging, the ERROR LED shows the error state.

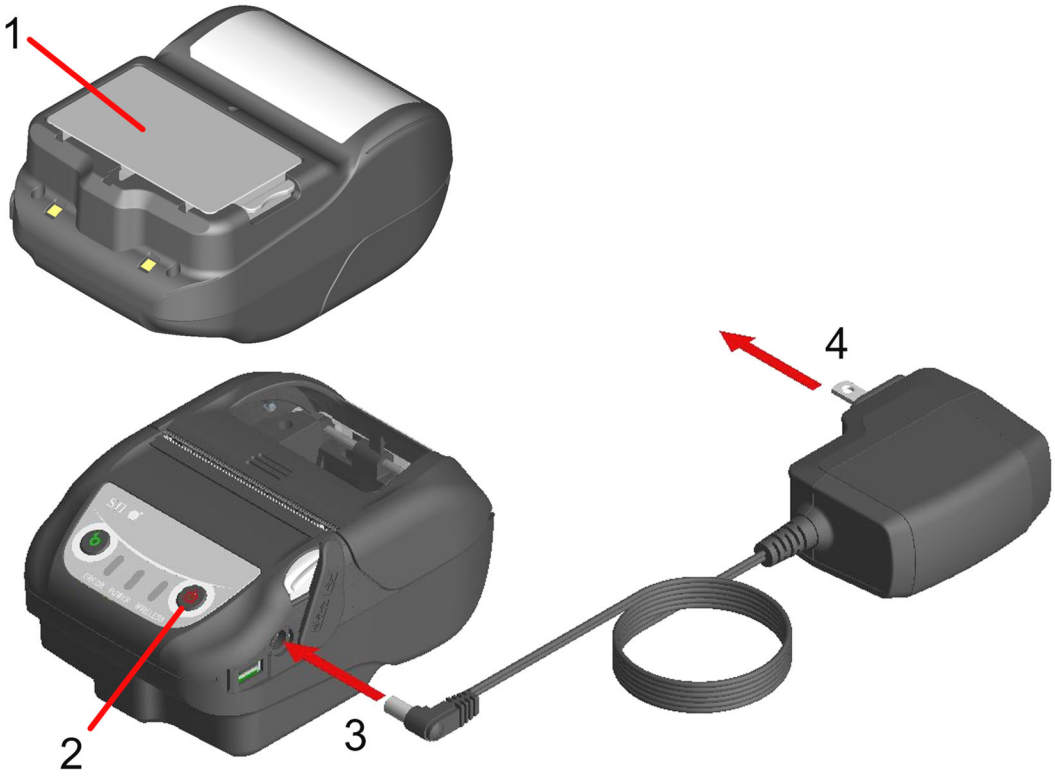

Figure 16-1 Charging in Power On Charging Mode from AC Adapter

NOTE

◆ Be sure to close the connector cover when the cable is not connected.

Charging in Power Off Charging Mode

Before connecting the AC adapter, the battery pack should be installed in the printer and the printer is turned off.

(1) Install the battery pack in the printer.

(2) Open the connector cover of the printer, and plug the DC plug of the AC adapter to the power connector of the printer.

(3) Plug the AC plug of the AC adapter to an outlet.

(4) Charging starts in the power off charging mode.*
During charging, the POWER LED lights in steady orange.

(5) When the charging is successfully complete to full charge, the power off charging mode ends and the POWER LED turns off.
The printer maintains the power off state.
In case that a battery error occurs during charging, the printer turns on automatically, and the ERROR LED shows the error state.
Since the power off charging mode is canceled, the printer does not turn off automatically.

*: When "Enable" is selected for Auto Activation by AC (MS1-7) of the function settings, the printer turns on automatically and charging starts in the power on charging mode.
For the function setting method, see "12. FUNCTION SETTINGS", and for the list of memory switch settings, see "24. MS SETTINGS LIST".

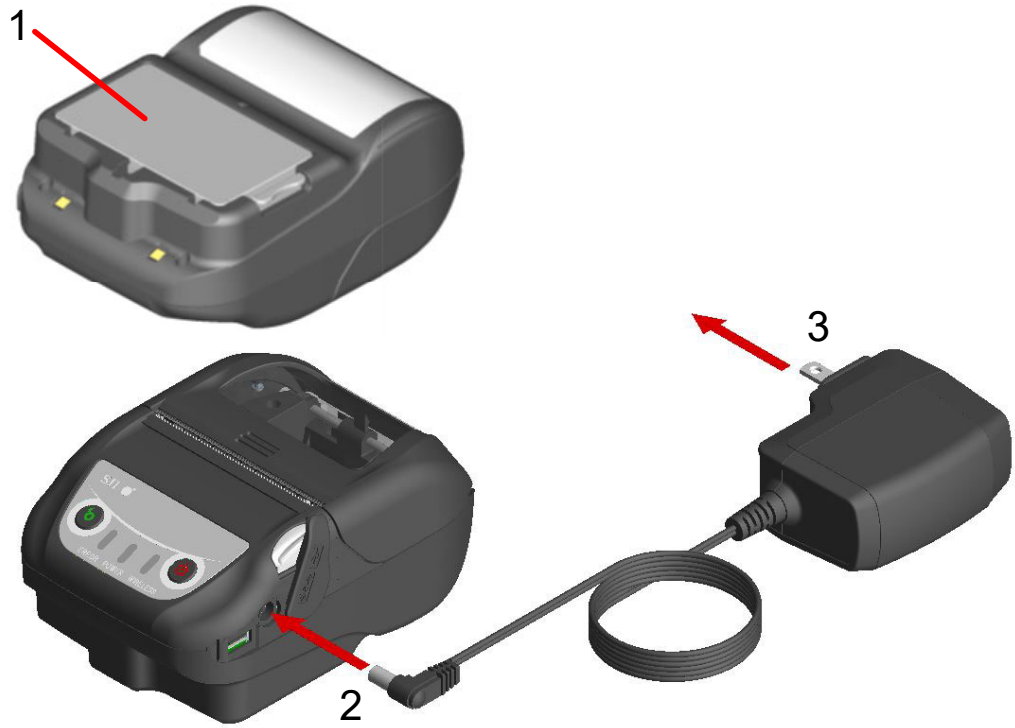

Figure 16-2 Charging in Power Off Charging Mode from AC adapter

NOTE

◆ Be sure to close the connector cover when the cable is not connected.

HINT

◆ Communication or printing in charging

- Power on charging mode:
  The printer can communicate or print while charging, but pauses charging in printing. (The POWER LED shows the battery remaining capacity.)
  Charging resumes when printing is completed, and the POWER LED turns to steady orange.
- Power off charging mode:
  The printer cannot communicate or print while charging.
  When communicating or printing, turn on the POWER Switch, and switch to the power on charging mode.
  The printer can communicate or print after its initialization.

◆ Cancel charging in the middle

- Unplug the AC plug of the AC adapter from the outlet.
  However, when the FLASH memory is being rewritten in power on charging mode, unplug the AC plug after rewriting is completed.

◆ Resume charging

- Power on charging mode:
  Turn on the POWER Switch again, then plug the AC plug of the AC adapter to an outlet.
- Power off charging mode:
  With the printer off state, plug the AC plug of the AC adapter to an outlet.

◆ Recharge automatically (Keep the AC adapter connected even after full charge)

- Power on charging mode:
  Charging starts automatically when the battery remaining capacity becomes level 2 or less.
- Power off charging mode:
  In case that the battery remaining capacity is level 2 or less when turning on the POWER Switch, charging starts automatically.

◆ Charge to full regardless of the battery remaining capacity
If the AC adapter is kept connected even after full charge, charging will not be performed until the battery remaining capacity reaches level 2 or less.

- Power on charging mode:
  Turn off the POWER Switch, then unplug the AC plug of the AC adapter from the outlet. After that, turn on the POWER Switch again, and plug the AC plug.
- Power off charging mode:
  Turn off the POWER Switch, then unplug the AC plug of the AC adapter from the outlet, and plug it again.

◆ Others

- The charging time depends on the ambient temperature and the voltage level of the battery pack.
  Normally, it takes about 4 hours to complete charging after running down the battery pack.
- The AC adapter may get a little hot when in use. This is normal and not a malfunction.

- Charging may not start if the AC plug of the AC adapter is reconnected immediately after unplugging from the outlet.
  In that case, unplug the DC plug of the AC adapter from the power connector of the printer, and resume from DC plug connection.

17. CHARGING FROM CRADLE

Using the cradle, the battery pack can be charged.

The cradle is an optional accessory. See "22. SPECIFICATIONS" and "23. ACCESSORIES AND CONSUMABLE PARTS", and be sure to purchase our specified accessories listed on these references.

NOTE

◆ The battery pack should be charged at 0°C to 40°C (32°F to 104°F).

■ Each Part of Cradle

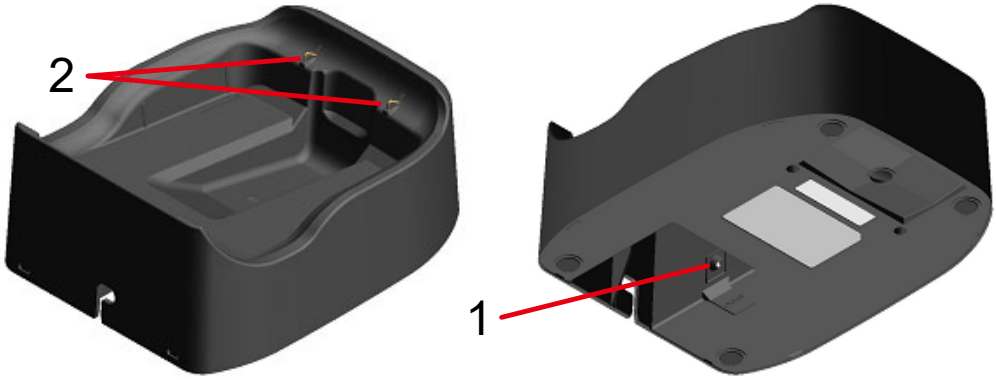

Figure 17-1 Each Part of Cradle (CDL-B02K-1)

1 Power connector

The DC plug of the AC adapter is connected.

2 Charging terminal

When setting the printer, this charging terminal is connected to the charging terminal of the printer.

■ Charging from Cradle

The cradle is only for charging. Even when the cradle is connected to the printer, the printer cannot print without the battery pack.
Depending on the state of the power supply at the start of charging, the battery pack can be charged in 2 modes.

- Power on charging mode: It is a mode to start charging from the printer on state. Communication and printing can be performed in charging.
- Power off charging mode: It is a mode to start charging from the printer off state. Only charging is performed, and all the functions such as communication and printing are stopped.

For the battery remaining capacity and the error state, see "7. LED INDICATION OF PRINTER".
Select the mode depending on the procedure.

(1) Connect the DC plug of AC adapter to the power connector of the cradle as shown in Figure 17-2. Fix the cable of the AC adapter to the groove of the cradle.

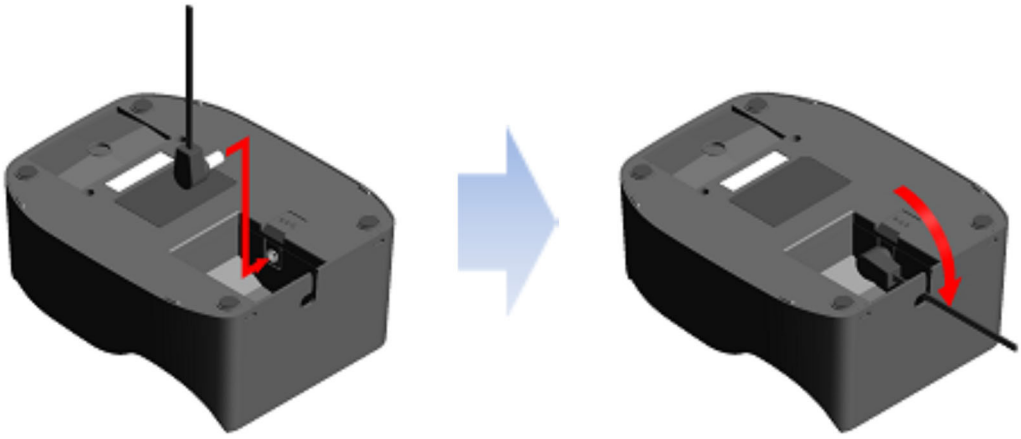

Figure 17-2 Cradle and AC Adapter Connection

(2) Plug the AC plug of the AC adapter to an outlet.

(3) Set the printer in the cradle by aligning the charging terminal of the printer with the charging terminal of the cradle as shown in Figure 17-3.
When setting the printer with the power on state, charging starts in the power on charging mode.
When setting the printer with the power off state, charging starts in the power off charging mode.*

*: When "Enable" is selected for Auto Activation by AC (MS1-7) of the function settings, the printer turns on automatically and charging starts in the power on charging mode.
For the function setting method, see "12. FUNCTION SETTINGS", and for the list of memory switch settings, see "24. MS SETTINGS LIST".

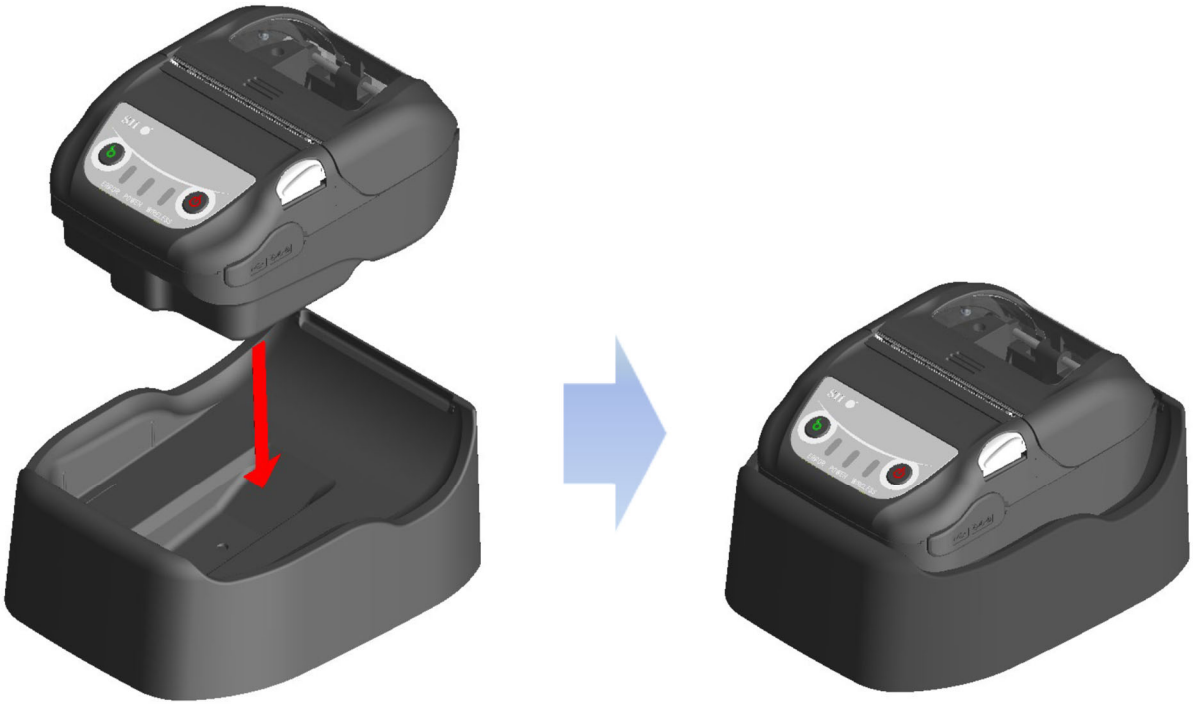

Figure 17-3 Printer and Cradle Connection

(4) During charging, the POWER LED lights in steady orange.

(5) When charging is successfully complete to full charge, the printer goes into one of the following states.

- In the case of the power on charging mode:
  The POWER LED turns to steady green.
  The printer maintains the power on state.
- In the case of the power off charging mode:
  The POWER LED turns off.
  The printer maintains the power off state.

In case that a battery error occurs during charging, the ERROR LED shows the error state.
For the battery remaining capacity and the error state, see "7. LED INDICATION OF PRINTER".

NOTE

◆ The battery pack should be charged at 0°C to 40°C (32°F to 104°F).
◆ Keep the charging terminal of the cradle free from dust and metal objects.
◆ When using the cradle for charging, DO NOT connect the DC plug of the AC adapter to the power connector of the printer.

HINT

◆ Communication or printing in charging

- Power on charging mode:
  The printer can communicate or print while charging, but pauses charging in printing.
  (The POWER LED shows the battery remaining capacity.)
  Charging resumes when printing is completed, and the POWER LED turns to steady orange.
- Power off charging mode:
  The printer cannot communicate or print while charging.
  When communicating or printing, turn on the POWER Switch, and switch to the power on charging mode.
  The printer can communicate or print after its initialization.

◆ Recharge automatically (Keep the printer set in the cradle even after full charge)

- Power on charging mode:
  Charging starts automatically when the battery remaining capacity becomes level 2 or less.
- Power off charging mode:
  In case that the battery remaining capacity is level 2 or less when turning on the POWER Switch, charging starts automatically.

◆ Charge to full charge regardless of the battery remaining capacity
If the printer is kept set in the cradle continuously even after full charge, charging will not be performed until the battery remaining capacity reaches level 2 or less.

- Power on charging mode:
  Remove the printer from the cradle, then set it again with the printer on state.
- Power off charging mode:
  Remove the printer from the cradle, then set it again with the printer off state.

◆ Others

- The charging time depends on the ambient temperature and the voltage level of the battery pack.
  Normally, it takes about 4 hours to complete charging after running down the battery pack.
- The AC adapter may get a little hot when in use. This is normal and not a malfunction.

18. CHARGING FROM CAR CHARGER

The battery pack can be charged by connecting a car accessory socket and the printer using the car charger.
The car charger is only for charging. Even when the car charger is connected to the printer, the printer cannot print without the battery pack.
Charging the battery pack from the car charger is possible while the car engine is running or accessory power is providing. Ensure that the car battery remaining capacity is sufficient before using the car charger through the accessory power.
The car charger is an optional accessory. See "22. SPECIFICATIONS" and "23. ACCESSORIES AND CONSUMABLE PARTS", and be sure to purchase our specified accessories listed on these references.

NOTE

- DO NOT remove the battery pack during charging.
- DO NOT connect the battery charger to the car charger.
- The battery pack should be charged at 0°C to 40°C (32°F to 104°F).
- After using the car charger, be sure to unplug the cigar plug from the car accessory socket.
- DO NOT print out during a vehicle driving. Ejected thermal paper may hinder driving of the vehicle.
- The car charger is not available in the EU, EFTA, UK and Turkey.

■ Each Part of Car Charger

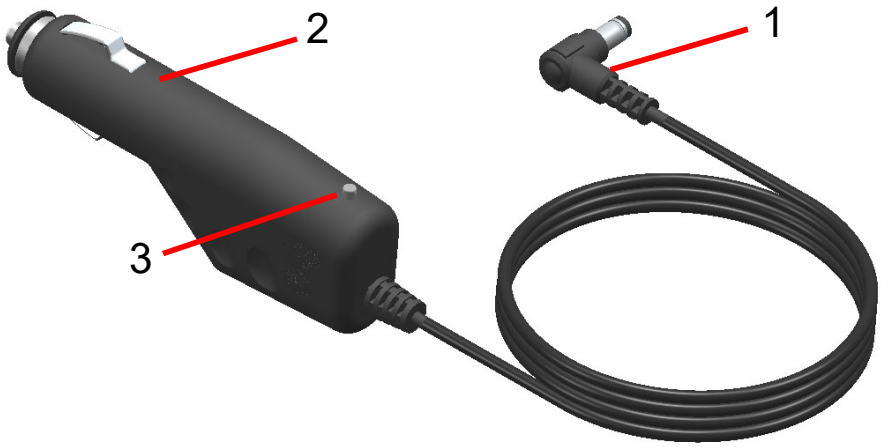

Figure 18-1 Each Part of Car Charger (CC-A12-A1)

1 DC plug

The DC plug is connected to the power connecter of the printer.

2 Cigar plug

The cigar plug is connected to a car accessory socket.

3 LED

The LED shows the active state.
The LED lights in steady green when the car engine is running or accessory power is providing.

■ Charging from Printer and Car Charger

The car charger is only for charging. Even when the car charger is connected to the printer, the printer cannot print without the battery pack.
Depending on the state of the power supply at the start of charging, the battery pack can be charged in 2 modes.

- Power on charging mode: It is a mode to start charging from the printer on state. Communication and printing can be performed in charging.
- Power off charging mode: It is a mode to start charging from the printer off state. Only charging is performed, and all the functions such as communication and printing are stopped.

For the battery remaining capacity and the error states, see "7. LED INDICATION OF PRINTER".
Select the mode depending on the procedure.

Charging in Power On Charging Mode

Before connecting the car charger, the battery pack should be installed in the printer and the printer is turned on.
Ensure that the car engine is running or providing the accessory power.

(1) Install the battery pack in the printer.

(2) Turn on the POWER Switch.
The POWER LED shows the battery remaining capacity.

(3) Open the connector cover of the printer, and plug the DC plug of the car charger to the power connector of the printer.

(4) Plug the cigar plug of the car charger to a car accessory socket.

(5) Charging starts in the power on charging mode.
During charging, the POWER LED lights in steady orange.

(6) When the charging is successfully complete to full charge, the POWER LED turns to steady green.
The printer maintains the power on state.
In case that a battery error occurs during charging, the ERROR LED shows the error state.

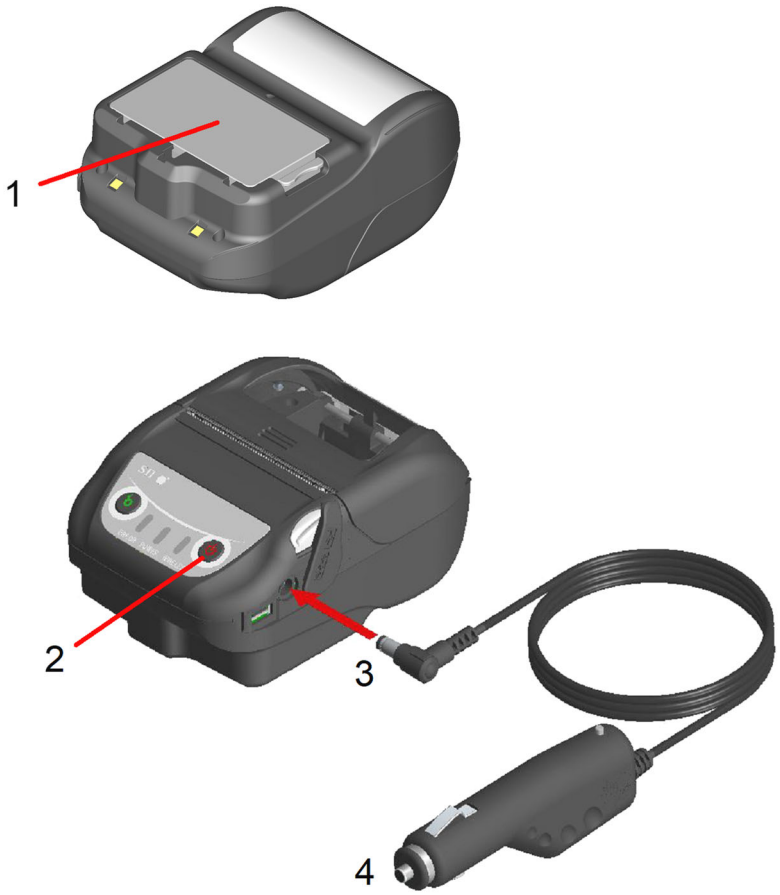

Figure 18-2 Charging in Power On Charging Mode from Car Charger

NOTE

◆ Be sure to close the connector cover when the cable is not connected.

Charging in Power Off Charging Mode

Before connecting the car charger, the battery pack should be installed in the printer and the printer is turned off.
Ensure that the car engine is running or providing the accessory power.

(1) Install the battery pack in the printer.

(2) Open the connector cover of the printer, and plug the DC plug of the car charger to the power connector of the printer.

(3) Plug the cigar plug of the car charger to a car accessory socket.

(4) Charging starts in the power off charging mode.*
During charging, the POWER LED lights in steady orange.

(5) When charging is successfully complete to full charge, the power off charging mode ends and the POWER LED turns off.
The printer maintains the power off state.
In case that a battery error occurs during charging, the printer turns on automatically, and the ERROR LED shows the error state.
Since the power off charging mode is canceled, the printer does not turn off automatically.

*: When "Enable" is selected for Auto Activation by AC (MS1-7) of the function settings, the printer turns on automatically and charging starts in the power on charging mode.
For the function setting method, see "12. FUNCTION SETTINGS", and for the list of memory switch settings, see "24. MS SETTINGS LIST".

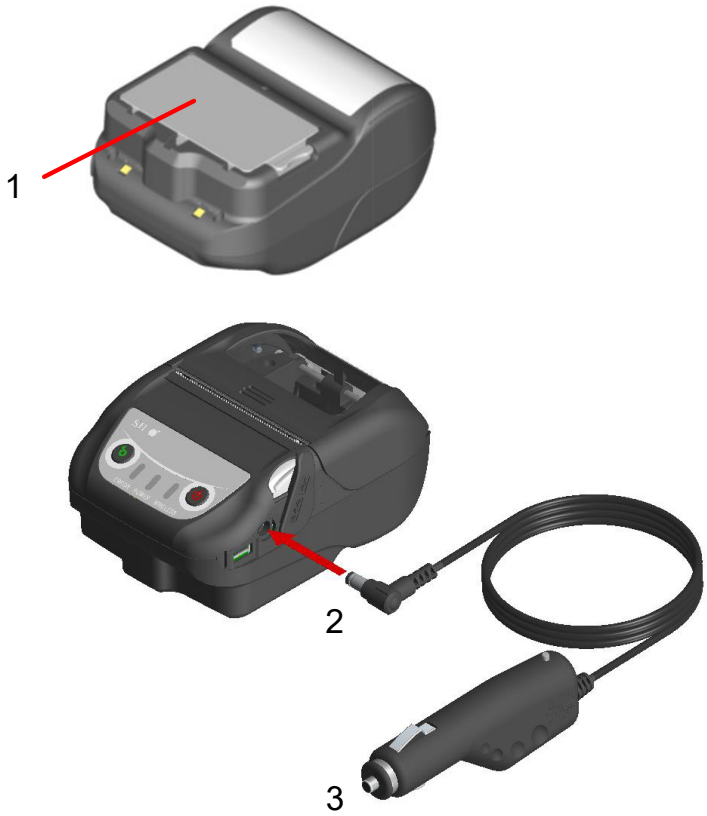

Figure 18-3 Charging in Power Off Charging Mode from Car Charger

NOTE

◆ Be sure to close the connector cover when the cable is not connected.

HINT

◆ Communication or printing in charging

- Power on charging mode:
  The printer can communicate or print while charging, but pauses charging in printing. (The POWER LED shows the battery remaining capacity.)
  Charging resumes when printing is completed, and the POWER LED turns to steady orange.
- Power off charging mode:
  The printer cannot communicate or print while charging.
  When communicating or printing, turn on the POWER Switch, and switch to the power on charging mode.
  The printer can communicate or print after its initialization.

◆ Cancel charging in the middle

- Unplug the cigar plug of the car charger from the car accessory socket.
  However, when the FLASH memory is being rewritten in power on charging mode, unplug the cigar plug after rewriting is completed.

◆ Resume charging

- Power on charging mode:
  Turn on the POWER Switch again, then plug the cigar plug of the car charger to a car accessory socket.
- Power off charging mode:
  With the printer off state, plug the cigar plug of the car charger to a car accessory socket.

◆ Recharge automatically (Keep the car charger connected even after full charge)

- Power on charging mode:
  Charging starts automatically when the battery remaining capacity becomes level 2 or less.
- Power off charging mode:
  In case that the battery remaining capacity is level 2 or less when turning on the POWER Switch, charging starts automatically.

◆ Charge to full regardless of the battery remaining capacity
  If the car charger is kept connected even after full charge, charging will not be performed until the battery remaining capacity reaches level 2 or less.

- Power on charging mode:
  Turn off the POWER Switch, then unplug the cigar plug of the car charger from the car accessory socket. After that, turn on the POWER Switch again, and plug the cigar plug.
- Power off charging mode:
  Turn off the POWER Switch, then unplug the cigar plug of the car charger from the car accessory socket, and plug it again.

◆ Others

- The charging time depends on the ambient temperature and the voltage level of the battery pack.
  Normally, it takes about 4 hours to complete charging after running down the battery pack.

- The car charger may get a little hot when in use. This is normal and not a malfunction.
- Charging may not start if the cigar plug of the car charger is reconnected immediately after unplugging from a car accessory socket.
  In that case, unplug the DC plug of the car charger from the power connector of the printer, and resume from DC plug connection.

19. CHARGING FROM BATTERY CHARGER

The battery pack can be charged using the battery charger.
There are 2 battery chargers; one is "PWC-A071-A1" that can charge 1 battery pack, and the other is a quad battery charger "PWC-A074-A1" that can charge maximum 4 battery packs.
To use the battery charger, the AC adapter suitable for each is required.
The AC adapter for quad battery charger requires the specified AC cable.
The battery charger, the quad battery charger, the AC adapter and AC cable for quad battery charger are optional accessories. See "22. SPECIFICATIONS" and "23. ACCESSORIES AND CONSUMABLE PARTS", and be sure to purchase our specified accessories listed on these references.

NOTE

- The battery pack should be charged at 0°C to 40°C (32°F to 104°F).
- Keep the terminal of the battery charger free from dust and metal objects.
- DO NOT install the battery pack when installing/removing the AC adapter.
- After using the battery charger, unplug the AC adapter and the AC cable from the outlet.
- Remove the battery pack after charging.
- DO NOT connect the car charger to the battery charger.

■ Each Part of Battery Charger

PWC-A071-A1 **PWC-A074-A1**

Figure 19-1 Each Part of Battery Charger

1 Power connector

The DC plug of the AC adapter is connected.

2 LED

The LED shows the active state.

■ LED Indication of Battery Charger

Table 19-1 Battery Charger States

Battery Pack States	LED	
	Color	Lighting Pattern
Battery pack not installed	Green	On
Charging completed	Green	On
Charging	Orange	On
Charging battery temperature error	Red	Blink-2
Battery installation error	Red	Blink-3
Battery error	Red	Blink-4
Hardware error	Red	On

Table 19-2 LED Blink Pattern

State	Pattern
Blink-2	
Blink-3	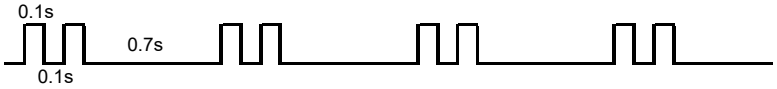
Blink-4	

■ Connecting Battery Charger and AC Adapter

This section describes how to connect the battery charger PWC-A071-A1 and the AC adapter PW-F1215-W1-xx1.
Connect the AC cable to the AC adapter for quad battery charger PW-D0940-W2 when using the quad battery charger PWC-A074-A1.
When the battery pack has already been installed, remove it from the battery charger.

(1) Plug the DC plug of AC adapter to the power connector of the battery charger.
Fix the cable of the AC adapter in the groove of the battery charger as shown in Figure 19-3.
(The cable can be fixed in either the left or right groove.)

(2) Plug the AC plug of the AC adapter to an outlet.
The LED of the battery charger changes from lighting off to steady green lighting.

Figure 19-2 Battery Charger and AC Adapter Connection

Figure 19-3 Fixing Cable

■ Charging Battery Pack from Battery Charger

This section describes how to charge the battery pack from the battery charger PWC-A071-A1.
The battery pack should be installed to the battery charger in the direction as shown in Figure 19-4.
The battery pack cannot be installed if inserted in the wrong direction.

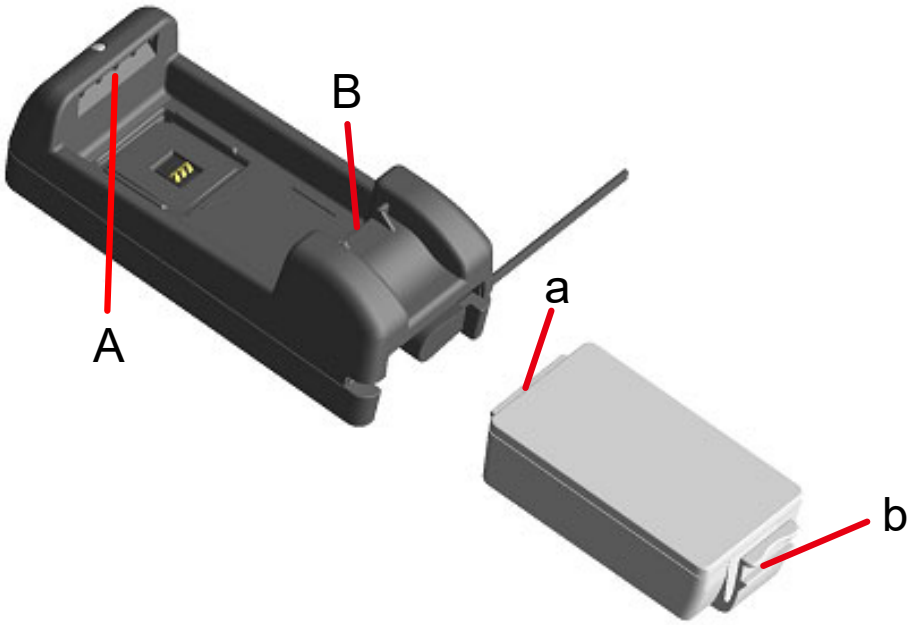

Figure 19-4　Battery Pack Orientation

(1)　Insert the tab "a" of the battery pack under the groove "A" of the battery charger.

Figure 19-5　Installing Battery Pack (1)

(2) Press the battery pack in the direction of the arrow in Figure 19-6 until the tab "b" of the battery pack locks in the groove "B" of the battery charger.

Figure 19-6 Installing Battery Pack (2)

(3) Make sure that the battery pack is installed in the printer correctly.

- Ensure the tab "a" of the battery pack is inserted under the groove "A" of the battery charger.
- Ensure the tab "b" of the battery pack is locked in the groove "B" of the battery charger.

(4) The LED of the battery charger turns to steady orange, and then charging starts.
During charging, the POWER LED remains lit in steady orange.
When the LED doesn't turn to steady orange, install the battery pack again.
In case the LED doesn't turn to steady orange even if the battery pack is installed again, take action in accordance with "Error Handling Procedure".

(5) When charging is completed, the LED of the battery charger turns to steady green.
Press the lever "c" of the battery pack in the direction of the arrow 1 in Figure 19-7, and remove the battery pack by pulling up in the direction of the arrow 2.
Battery packs can be removed while charging.
In case that a battery installation error or battery error occurs during charging, the LED starts to blink in red.
When it happens, take action in accordance with "Error Handling Procedure".

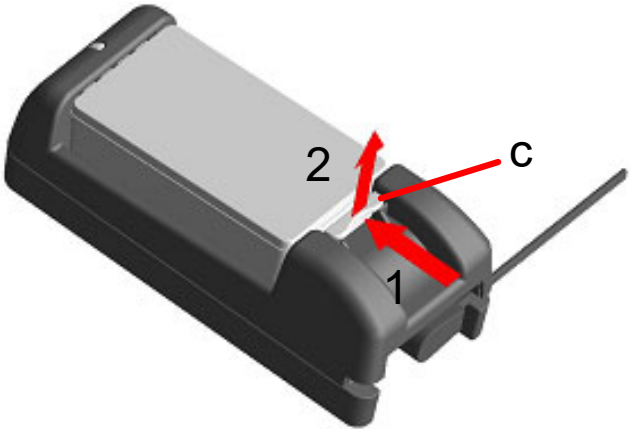

Figure 19-7 Battery Pack Removal from Battery Charger

HINT

- The charging time depends on the ambient temperature and the voltage level of the battery pack. Normally, using the battery charger "PWC-A071-A1", it takes about 4 hours to complete charging after running down the battery pack. Using the quad battery charger "PWC-A074-A1", it takes about 5 hours.
- The battery charger and the AC adapter may get a little hot when in use. This is normal and not a malfunction.

■ Error Handling Procedure

Table 19-3 Error Handling Procedure

Phenomenon	Possible Cause	Corrective Action
LED doesn't light up	The battery charger doesn't connect to the power supply.	Securely connect the AC adapter and the AC cable.
	The AC adapter is failed or AC cable is broken.	Replace the AC adapter or AC cable with a new one.
	The battery charger is failed.	Replace the battery charger with a new one.
LED shows other than green lighting with no battery pack installed	The battery charger is failed.	Replace the battery charger with a new one.
LED shows charging temperature error	The battery pack temperature is out of the operating temperature range (charging).	The printer automatically resumes charging when the battery pack temperature is within the operating temperature range (charging). Wait for a while in the place where the ambient temperature is 0°C to 40°C (32°F to 104°F).
LED shows battery installation error	The battery pack is installed incorrectly.	Install the battery pack correctly again.
	The terminal is in a contact failure.	Remove the battery pack from the battery charger, clean the terminal, and install it again.
	The battery pack is failed.	Replace the battery pack with a new one.
LED shows battery error	The battery pack is failed.	Replace the battery pack with a new one.
LED shows hardware error	The battery charger or AC adapter is failed.	Replace the battery charger or AC adapter with a new one.

■ Mounting to Wall

This battery charger can be mounted to a wall using the bottom holes shown in Figure 19-8.

- Recommended screw: pan head screw 3 mm
  (head shape: ϕ5.5 mm, head size: 2 mm)

Mounting Size

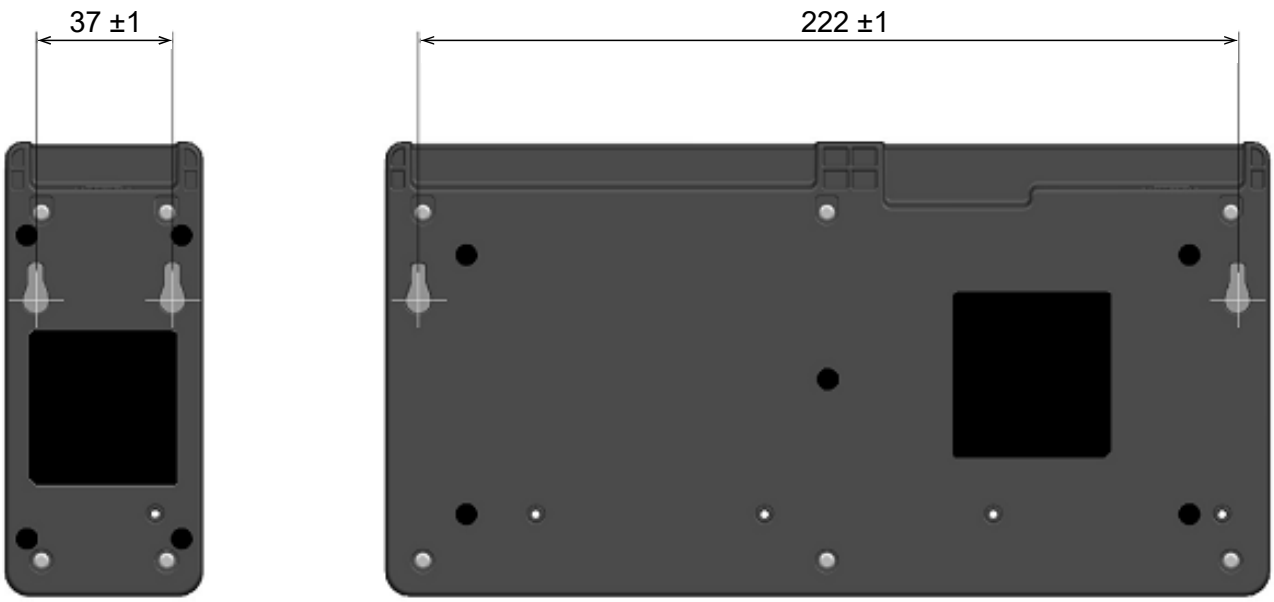

Figure 19-8 Bottom of Battery Charger

NOTE

◆ Check the place and the material/structure of the wall, and then install the battery charger securely. Injury or destruction of property might occur by dropping off.

20. PRINTER MAINTENANCE

The thermal head of the printer does not require user maintenance.
When paper powder accumulates, cleaning the thermal head can maintain the print quality for an extended period of time.

■ Cleaning Thermal Head / Platen

(1) Turn off the printer.

(2) Remove the battery pack from the printer.

(3) Open the paper cover.

(4) Clean the thermal head and/or the platen with a cotton swab moistened with a small amount of ethyl alcohol. (See Figure 20-1.)

Figure 20-1 Cleaning Thermal Head / Platen

(5) Wait until any ethyl alcohol remaining on the thermal head and the platen dries out completely, and then close the paper cover.

NOTE

- Clean the thermal head after it cools down.
- Be sure to wipe the thermal head with a cotton swab or other soft material.
- The printer has 2 paper cutters on the paper outlet: one is on the printer side, and the other is on the paper cover side. Be careful not to cut your fingers by the paper cutters during cleaning.
- DO NOT touch the gear of the platen. Doing so may cause loss of printing quality or damage.

21. TROUBLESHOOTING

Check the following points before requesting for repair:

■ The power does not turn on

- Is the specified battery pack being used?
- Is the battery pack sufficiently charged?
- Is the battery pack installed correctly?

■ The printer does not print or connect

- Is the USB cable connected correctly?
- Do the specifications of the USB cable conform to its specifications of this manual?
- Does the used interface conform to the printer?
- Is the Bluetooth / Wireless LAN state normal?
- Is the communication condition between the printer and the host device correct?
- Is the specified thermal paper being used? Is the paper orientation (surface/back) correct?

■ An error is shown

- See "7. LED INDICATION OF PRINTER".
- Are the function settings of the printer correct?

■ The battery pack cannot be installed

- Is the battery pack connected correctly?
- Is the specified battery pack being used?

■ The battery runs out soon even if charged

- Has the battery been charged correctly?
- If the battery pack is charged correctly but does not last for a long time, it is almost dead. Replace it with a new one.

22. SPECIFICATIONS

■ Printer Specifications

Item	Specification
Model	MP-B21L-B46JK1 (Bluetooth Model) MP-B21L-W46JK1x (Wireless LAN Model)
Printing method	Thermal printing
Dot density	8 dots/mm
Paper width / Printing width (Number of effective dots)	58 mm / 48 mm (384 dots) min. 25.4 mm / 21 mm (when using the partition plate)
Number of characters per line*1	24 dots × 12 dots 32 digits 16 dots × 8 dots 48 digits
Character size (H × W)	1-byte: H 24 dots × W 12 dots, H 16 dots × W 8 dots 2-byte: H 24 dots × W 24 dots, H 16 dots × W 16 dots
Printing speed max.	153 mm/s
Operating temperature	-20°C to 55°C (-4°F to 131°F)
Relative humidity*2	10%RH to 90%RH
Dimensions (W × D × H)	90 mm × 126 mm × 58 mm
Mass	Approx. 370 g (including the battery pack, excluding the thermal paper)

*1: This is the numerical value when character spacing is 0 dots.
*2: The guaranteed humidity at each temperature is within the range shown in Figure 22-1.

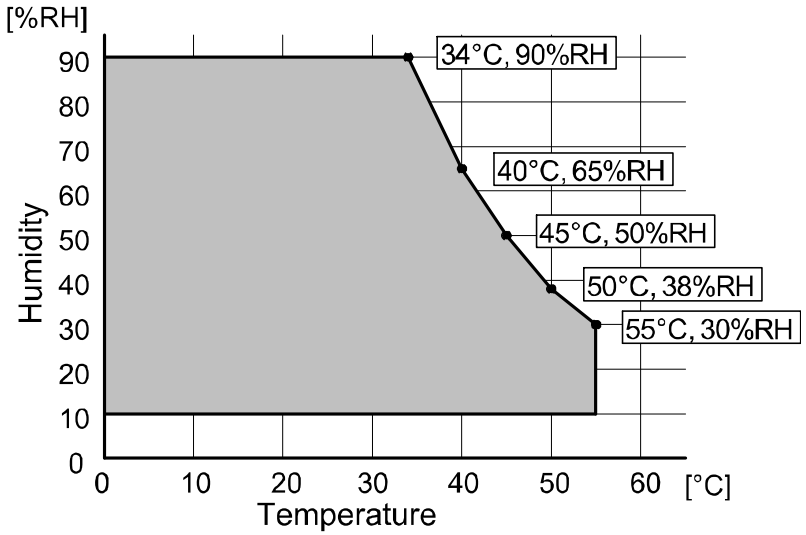

Figure 22-1 Operating Temperature and Humidity Range (Printing)

■ Battery Pack Specifications (Specified Accessories)

Item	Specification
Model	BP-A0720-B1
Battery	Lithium ion
Rated voltage	DC7.2 V
Rated capacity	1950 mAh
Operating temperature	-20°C to 55°C (-4°F to 131°F) (printing) 0°C to 40°C (32°F to 104°F) (charging)
Mass	Approx. 125 g

■ Cradle Specifications (Specified Accessories)

Item	Specification
Model	CDL-B02K-1
Specified AC adapter	PW-F1215-W1-xx1*
Operating temperature	0°C to 40°C (32°F to 104°F)
Dimensions (W × D × H)	115.2 mm × 143.2 mm × 60.7 mm
Mass	Approx. 130 g

*: The model differs by country/region. See "Sale Destinations.".

■ Battery Charger Specifications (Specified Accessories)

Item	Specification
Model	PWC-A071-A1
Input voltage	DC9.0 to 12.0 V
Specified AC adapter	PW-F1215-W1-xx1*
Specified battery pack	BP-A0720-B1
Operating temperature	0°C to 40°C (32°F to 104°F)
Dimensions (W × D × H)	54.0 mm × 123.0 mm × 41.3 mm
Mass	Approx. 82 g

*: The model differs by country/region. See "Sale Destinations".

■ Quad Battery Charger Specifications (Specified Accessories)

Item	Specification
Model	PWC-A074-A1
Input voltage	DC9.0 V
Specified AC adapter	PW-D0940-W2
Specified battery pack	BP-A0720-B1
Operating temperature	0°C to 40°C (32°F to 104°F)
Dimensions (W × D × H)	240.0 mm × 123.0 mm × 41.3 mm
Mass	Approx. 304 g

■ AC Adapter Specifications (For Printer, Cradle and Battery Charger) (Specified Accessories)

Item	Specification
Model	PW-F1215-W1-xx1*1
Input voltage	AC100 to 240 V, 50/60 Hz
Rated output	DC12.0 V, 1.5 A
Operating temperature	0°C to 40°C (32°F to 104°F)
Dimensions (W × D × H)	32.6 mm × 69.0 mm × 75.2 mm*2
Mass	Approx. 120 g

*1: The model differs by country/region. See "Sale Destinations".
*2: Excluding the cable.

■ AC Adapter Specifications (For Quad Battery Charger) (Specified Accessories)

Item	Specification
Model	PW-D0940-W2
Specified AC cable	CB-xxxx-xxx-E*1
Input voltage	AC100 to 240 V, 50/60 Hz
Rated output	DC9.0 V, 4 A
Operating temperature	0°C to 40°C (32°F to 104°F)
Dimensions (W × D × H)	53.0 mm × 114.0 mm × 37.0 mm*2
Mass	Approx. 318 g

*1: The model differs by country/region. See "Sale Destinations".
*2: Excluding the cable.

■ Car Charger Specifications (Specified Accessories)

Item	Specification
Model	CC-A12-A1
Input voltage	DC12.0 V, DC24.0 V
Rated output	DC12.0 V, 1.5 A
Operating temperature	0°C to 40°C (32°F to 104°F)
Dimensions (W × D × H)	105.8 mm × 37.7 mm × 20.1 mm*
Mass	Approx. 56 g

*: Excluding the cable.

■ Specified USB Cable Specifications (Specified Accessories)

Item	Specification
Model	IFC-U06-1
Color	Black
Length	Approx. 1000 mm
Plug C1	Series "A" plug
Plug C2	Series "C" plug

■ Interface Specifications

USB interface specifications

Item	Specification
Version	Ver. 2.0
Printer data transmission mode	Bulk transfer (12 Mbps)

Bluetooth interface specifications

Item	Specification
Version	Ver. 5.2
Transmission power class	Class 2
Profile	SPP, iAP2

Wireless LAN interface specifications

Item	Specification
Communication standard	IEEE802.11b/g/n, IEEE802.11a/n
Network configuration	Infrastructure
Station type	Access Point (Simple AP mode), Client (Client mode)
Certification/encryption	
Security :	None, WEP*, WPA-PSK, WPA2-PSK, WPA-Enterprise*, WPA2-Enterprise*
EAP :	EAP-TTLS*, PEAP*

*: For Client mode only

NFC tag specifications

Item	Specification
Communication standard	ISO14443 typeA
Frequency	13.56 MHz

■ Sale Destinations

Sale destinations for the printer are listed below.

Country/Region*1	Bluetooth Model	Wireless LAN Model*2
Japan	MP-B21L-B46JK1	MP-B21L-W46JK1J
USA, Canada		MP-B21L-W46JK1U
EU, EFTA, UK		MP-B21L-W46JK1E
Turkey		

*1: Ask your SII sales representative when you want to operate the products in countries/regions other than those listed above.
*2: The model differs by country/region.

Sale destinations for the specified accessories are listed below.

Country/Region*	Battery Pack	Cradle	Battery Charger	Quad Battery Charger	Car Charger
Japan	BP-A0720-B1	CDL-B02K-1	PWC-A71-A1	PWC-A074-A1	CC-A12-A1
USA, Canada					
EU, EFTA, UK					-
Turkey					

*: Ask your SII sales representative when you want to operate the products in countries/regions other than those listed above.

Country/Region*1	For Printer, Cradle, Battery charger	For Quad Battery Charger	
	AC Adapter*2	AC Adapter	AC Cable*2
Japan	PW-F1215-W1-US1	PW-D0940-W2	CB-JP04-18A-E
USA, Canada			CB-US04-18A-E
EU, EFTA	PW-F1215-W1-EU1		CB-CE01-18B-E
Turkey			
UK	PW-F1215-W1-GB1		CB-UK01-20A-E

*1: Ask your SII sales representative when you want to operate the products in countries/regions other than those listed above.
*2: The model differs by country/region.

23. ACCESSORIES AND CONSUMABLE PARTS

■ Specified Accessories

Name	Model
Battery pack*1	BP-A0720-B1
Cradle	CDL-B02K-1
AC adapter (for printer, cradle and battery charger)*1 *2	PW-F1215-W1-US1 PW-F1215-W1-EU1 PW-F1215-W1-GB1
AC adapter (for quad battery charger)	PW-D0940-W2
AC cable (for PW-D0940-W2)*2	CB-JP04-18A-E CB-US04-18A-E CB-CE01-18B-E CB-UK01-20A-E
Battery charger	PWC-A071-A1
Quad battery charger	PWC-A074-A1
Car charger	CC-A12-A1
Partition plate*3	PARTITION PLATE
Belt clip*1	BLT-B02-1
Shoulder strap	STR-A03-1
Strap attachment	AMT-B30-1
USB cable	IFC-U06-1
Carrying case	CVR-201-1

*1: It is included with the printer at the factory.
*2: The shape of an outlet differs by country. Confirm it before using.
*3: Ask your SII sales representative for information on paper widths compatible with partition plates.

■ Specified Thermal Paper*1 *2 *3

Paper Type	Model	Manufacturer
Receipt	TF50KS-EY	Nippon Paper
	PD160R	Oji Paper
	P220VBB-1	Mitsubishi Paper Mills.
	KT48PF	Papierfabrik August Koehler
Label*4*5	HW76LX	Lintec
	KIP370*6	Kanzaki Specialty Papers
	KLS46*6	KANZAN Spezialpapiere

*1: We do not handle.
*2: Use the thermal paper whose maximum external diameter is ϕ51 mm or less.
Use the paper roll whose maximum width is equal or less than +0.5 mm including winding deviation.
*3: Ask your SII sales representative when there are any questions about the mark specifications, or the gap specifications for the label.
*4: Printing under low temperature environment (0°C / 32°F or lower) might cause unclear printing. When using under low temperature environment, select "Quality 1" at Print Quality Selection (MS2-3 to 4) of Function Settings as necessary.
For the Function Settings method, see "12. FUNCTION SETTINGS", and for the setting contents list of the memory switch, see "24. MS SETTINGS LIST".
*5: Printing under a low temperature (0°C (32°F) or lower) environment might cause deterioration of the adhesive strength of the label. Confirm with the label in advance.
*6: This is the model number of the top paper used for the label. The printing quality may not be fulfilled depending on the type of release paper used for label processing. Confirm the printing quality in advance using the label-processed paper.

When using different thermal paper from the one specified, the printing quality or specified life of the thermal head would not be guaranteed.

24. MS SETTINGS LIST

: Default

General Setting 1

MS	Function	Value	
		0	1
1-1	Interface Selection (Interface)	USB	**USB/Wireless**
1-2	Mark/Gap Mode Selection (Mark/Gap Mode)	Enable	**Disable**
1-3 to 5	Command System Selection (Command System)	**000B : ESC/POS** 100B : CPCL 101B : ZPL II Other than those above: Prohibition	
1-6	Data Discard Selection When Error Occurs (Error Through)	**Enable**	Disable
1-7	Auto Activation by AC Selection (Auto Activation by AC)	Enable	**Disable**
1-8	Data Discard Selection When Output Buffer Full Occurs (Response Data Discarding)	Enable	**Disable**

General Setting 2

MS	Function	Value	
		0	1
2-1	Initialization Performance Selection After Paper Setting (Paper Set Handle)	Form Feed	**None**
2-2	Realtime Command Selection (Realtime Command)	**Enable**	Disable
2-3 to 4	Print Quality Selection*1 (Print Quality)	01B : Quality 2 10B : Quality 1 **11B : Standard** Other than those above: Prohibition	
2-5 to 6	LED Brightness Selection*2 (LED Brightness)	00B : Level 1 01B : Level 2 10B : Level 3 **11B : Level 4**	
2-7	Paper Form Feed Selection by Feed Switch (SW Paper Form Feed)	Print Position Form Feed (Print Position)	**Cut Position Form Feed (Cut Position)**
2-8	Paper Width Selection (Paper Width)	Narrow	**Normal**

*1: Standard : The printing speed is highest out of all 3 options. The printing quality is normal.
Quality 1 : The printing speed is lower than "Standard" at low temperature environment only, but the print quality of the specific thermal paper under low temperature environment can be optimized.
Quality 2 : The printing speed is lower regardless of environment temperature, but the reading accuracy of ladder barcode and two-dimensional barcode becomes more certain.

*2: The minimum brightness is level 1 and the maximum brightness is level 4.

General Setting 3

MS	Function	Value	
		0	1
3-1 to 8	Print Width (Print Width)	Setting value = number of dots in 8 (168 ≤ number of dots ≤ 384) **(Default : 384 dots)**	

General Setting 4

MS	Function	Value	
		0	1
4-1 to 8	Print Density Selection (Print Density)	01000110B: 70% 01001011B: 75% 01010000B: 80% 01010101B: 85% 01011010B: 90% 01011111B: 95% **01100100B: 100%** 01101001B: 105% 01101110B: 110% 01110011B: 115% 01111000B: 120% 01111101B: 125% 10000010B: 130%	

General Setting 5

MS	Function	Value	
		0	1
5-1 to 8	Thermal Paper Selection (Thermal Paper)	**00000000B: TF50KS-EY** 00000001B: PD160R 00000010B: P220VBB-1 00000100B: KT48PF 00000110B: HW76LX 00000111B: KIP370 00001000B: KLS46 Other than above: Prohibition	

General Setting 6

MS	Function	Value	
		0	1
6-1	Sensor Selection (Sensor Select)	**Mark Sensor Selection (Mark)**	Gap Sensor Selection (Gap)
6-2 to 8	Reserved	-	**Fixed**

Auto Power Off Time Setting

MS	Function	Value	
		0	1
7 to 8	Auto Power Off Time Setting (Auto Power Off Time) MS7 : Lower 8 bits MS8 : Higher 8 bits	Set in seconds (Total of higher 8 bits and lower 8 bits: 0 to 65535 seconds, **0: Setting to 0 disables the auto power off.**)	

General Setting 9

MS	Function	Value	
		0	1
9-1	Automatic Status Response Selection (Auto Status Back)	**Enable**	Disable
9-2	Initialized Response Selection (Init. Response)	**Enable**	Disable
9-3 to 8	Reserved	-	**Fixed**
	Reserved	-	**Fixed**
	Reserved	-	**Fixed**
	Reserved	-	**Fixed**
	Reserved	-	**Fixed**
	Reserved	-	**Fixed**

General Setting 13

MS	Function	Value	
		0	1
13-1	Kanji Code System (Kanji Code)	Shift-JIS Code	**JIS Code**
13-2	180° Reverse Function Selection (Reverse Function)	Enable	**Disable**
13-3 to 8	Reserved	-	**Fixed**
	Reserved	-	**Fixed**
	Reserved	-	**Fixed**
	Reserved	-	**Fixed**
	Reserved	-	**Fixed**
	Reserved	-	**Fixed**

International Character Setting

MS	Function	Value	
		0	1
15	International Character Selection (International Character)	**00000000B: USA** 00000001B: France 00000010B: Germany 00000011B: United Kingdom 00000100B: Denmark I 00000101B: Sweden 00000110B: Italy 00000111B: Spain I 00001000B: Japan 00001001B: Norway 00001010B: Denmark II 00001011B: Spain II 00001100B: Latin America 00001101B: Prohibition 00001110B: Prohibition 00001111B: Prohibition 00010000B: Prohibition 00010001B: Arabia Other than those above: Prohibition	

Character Code Table Setting

MS	Function	Value	
		0	1
16	Character Code Table Setting (Character Code Table)	**00000000B: USA, Standard Europe (Code Page 437)** 00000001B: Katakana 00000010B: Multilingual (Code Page 850) 00000011B: Portuguese (Code Page 860) 00000100B: Canadian-French (Code Page 863) 00000101B: Nordic (Code Page 865) 00001101B: Turkish (Code Page 857) 00001110B: Greek (Code Page 737) 00010000B: Latin (Code Page 1252) 00010001B: Russian (Code Page 866) 00010010B: Eastern Europe (Code Page 852) 00010011B: Euro (Code Page 858) 00100010B: Cyrillic (Code Page 855) 00100101B: Arabic (Code Page 864) 00101101B: Central European (Code Page 1250) 00101110B: Cyrillic (Code Page 1251) 00101111B: Greek (Code Page 1253) 00110000B: Turkish (Code Page 1254) 11111111B: User Page Other than those above: Prohibition	

Mark Detection Cut Position Correction

MS	Function	Value	
		0	1
21 to 22	Mark Detection Cut Position Correction (Cut Position Correction) MS21 : Lower 8 bits MS22 : Higher 8 bits	Total of higher 8 bits and lower 8 bits : -28 to 2400 dots **(Default : 122)**	

Mark Detection Maximum Feeding Length Setting

MS	Function	Value	
		0	1
23 to 24	Mark Detection Maximum Feeding Length Setting MS23 : Lower 8 bits MS24 : Higher 8 bits	Total of higher 8 bits and lower 8 bits : 1 to 2400 dots **(Default : 2400)**	

Mark Detection Threshold Value

MS	Function	Value	
		0	1
25-1 to 8	Mark Detection Threshold Value	01H to FEH **(Default : 80H)**	

Mark Detection Print Position Correction

MS	Function	Value	
		0	1
26 to 27	Mark Detection Print Position Correction (Print Position Correction) MS26 : Lower 8 bits MS27 : Higher 8 bits	Total of higher 8 bits and lower 8 bits : -28 to 2400 dots **(Default : 122)**	

Gap Detection Threshold Value

MS	Function	Value	
		0	1
28-1 to 8	Gap Detection Threshold Value	01H to FEH **(Default : 99H)**	

Seiko Instruments Inc.
563, Takatsukashinden, Matsudo-shi,
Chiba 270-2222, Japan
Print System Division
Tel: +81-47-709-0925
Fax: +81-47-709-1793

Seiko Instruments U.S.A., Inc.
Thermal Printer Div.
21221 S. Western Avenue, Suite 250, Torrance, CA 90501, U.S.A.
Tel: +1-800-688-0817 Fax: +1-310-517-7779

Seiko Instruments GmbH (Economic operator)
Siemensstrasse 9, D-63263 Neu-Isenburg, Germany
Tel: +49-6102-297-0 Fax: +49-6102-297-50100
info@seiko-instruments.de

Seiko Instruments Trading (H.K.) Ltd.
7/F, Ying Tung Industrial Building, 802 Lai Chi Kok Road, Kowloon, Hong Kong
Tel: +852-2494-5160 Fax: +852-2424-0901

Seiko U.K. Limited (Authorized Representative in the United Kingdom)
SC House, Vanwall Road, Maidenhead, Berkshire, SL6 4UW

Download page: https://www.sii.co.jp/sps/eg/download/index.html

(Specifications are subject to change without notice.)