SII

USER'S GUIDE

Thermal Printer

DPU-S445 SERIES

Read this user's guide carefully before using the printer.
Keep this user's guide in a place where it can be accessed quickly.

Seiko Instruments Inc.

Rev.01 March 2018
Rev.02 December 2019
Rev.03 May 2020
Rev.04 November 2021
Rev.05 December 2022
Rev.06 April 2024
Rev.07 April 2025
Rev.08 July 2026

Copyright ©2018-2026 by Seiko Instruments Inc. All rights reserved.

The information contained herein is the property of SII and shall not be reproduced in whole or in part without prior written approval of SII.

SII reserves the right to make changes in the specifications and materials contained herein without notice and shall not be responsible for any damages (including consequential) caused by reliance on the materials presented, including but not limited to typographical, arithmetic, and listing errors.
This product is developed as a product for industrial equipment use.

SII is a trademark of Seiko Instruments Inc.
Bluetooth® is registered trademarks of Bluetooth SIG, Inc.
IOS is a trademark or registered trademark of Cisco in the U.S. and other countries and is used under license.
All other trademarks are the properties of their respective companies.

For use in Turkey
Complies with Electrical and Electronic Equipment Directive.

Türkiye' deki Kullanıcılar için
AEEE Yönetmeliğine Uygundur.

Applied to only Bluetooth model:
contains FCC ID: SQK-MBH7BTZXXC2
contains IC: 337L-MBH7BTZXXC2

Applicable EC Directive and Standards

Product: Thermal Printer DPU-S445-01C-E

Directive:	Title
2014/53/EU	Radio Equipment Directive
2009/125/EC	Directive on Eco-Design of Energy-related Products
2011/65/EU (Commission Delegated Directive (EU) 2015/863)	Restriction of the use of certain hazardous substances (RoHS) Directive

Standards
EN 301 489-1
EN 301 489-17
EN 300 328
EN 62368-1
EN 50564
EN IEC 63000

Restrictions: This product is for use only with nominal voltage in each country.

This product may be used in following all EU and EFTA countries:

EU

Austria, Belgium, Bulgaria, Cyprus, Czech Republic, Denmark, Estonia, Finland, France, Germany, Greece, Hungary, Ireland, Italy, Latvia, Lithuania, Luxembourg, Malta, Poland, Portugal, Romania, Slovakia, Slovenia, Spain, Sweden, Netherlands

EFTA

Iceland, Norway, Switzerland, Liechtenstein

Product: Thermal Printer DPU-S445-00C-E

Directive:	Title
2014/30/EU	EC Electromagnetic Compatibility Directive
2009/125/EC	Directive on Eco-Design of Energy-related Products
2011/65/EU (Commission Delegated Directive (EU) 2015/863)	Restriction of the use of certain hazardous substances (RoHS) Directive

Standards

EN 55032 Class B
EN IEC 61000-3-2
EN 61000-3-3
EN 55035
EN 50564
EN IEC 63000

Product: AC adapter PW-D0940-W2

Directive:	Title
2014/30/EU	EC Electromagnetic Compatibility Directive
2014/35/EU	EC Low Voltage Directive
2009/125/EC	Directive on Eco-Design of Energy-related Products
2011/65/EU (Commission Delegated Directive (EU) 2015/863)	Restriction of the use of certain hazardous substances (RoHS) Directive

Standards

EN 55032 Class B
EN IEC 61000-3-2
EN 61000-3-3
EN 55035
EN 62368-1
EN 50563
EN IEC 63000

Product: Battery Charger PWC-L07C1-W1

Directive:	Title
2014/30/EU	EC Electromagnetic Compatibility Directive
2011/65/EU (Commission Delegated Directive (EU) 2015/863)	Restriction of the use of certain hazardous substances (RoHS) Directive

Standards

EN 55032 Class B
EN IEC 61000-3-2
EN 61000-3-3
EN 55035
EN IEC 63000

Applicable UK Directive and Standards

Product: Thermal Printer DPU-S445-01C-E

Directive:

Radio Equipment Regulations 2017
The Ecodesign for Energy-Related Products and Energy Information (Amendment) (EU Exit) Regulations 2019
The Restriction of the Use of Certain Hazardous Substances in Electrical and Electronic Equipment Regulations 2012

Standards

BS EN 301 489-1
BS EN 301 489-17
BS EN 300 328
BS EN 62368-1
BS EN 50564
BS EN IEC 63000

UK
CA

Restrictions: This product is for use only with nominal voltage in each country.

Product: Thermal Printer DPU-S445-00C-E

Directive:

Electromagnetic Compatibility Regulations 2016
The Ecodesign for Energy-Related Products and Energy Information (Amendment) (EU Exit) Regulations 2019
The Restriction of the Use of Certain Hazardous Substances in Electrical and Electronic Equipment Regulations 2012

Standards

BS EN 55032 Class B
BS EN IEC 61000-3-2
BS EN 61000-3-3
BS EN 55035
BS EN 50564
BS EN IEC 63000

Product: AC adapter PW-D0940-W2

Directive:

Electromagnetic Compatibility Regulations 2016
Electrical Equipment (Safety) Regulations 2016
The Ecodesign for Energy-Related Products and Energy Information (Amendment) (EU Exit) Regulations 2019
The Restriction of the Use of Certain Hazardous Substances in Electrical and Electronic Equipment Regulations 2012

Standards

BS EN 55032 Class B
BS EN IEC 61000-3-2
BS EN 61000-3-3
BS EN 55035
BS EN 62368-1
BS EN 50563
BS EN IEC 63000

Product: Battery Charger PWC-L07C1-W1

Directive:

Electromagnetic Compatibility Regulations 2016

The Restriction of the Use of Certain Hazardous Substances in Electrical and Electronic Equipment Regulations 2012

Standards

BS EN 55032 Class B
BS EN IEC 61000-3-2
BS EN 61000-3-3
BS EN 55035
BS EN IEC 63000

Federal Communications Commission (FCC) compliance statement

This equipment has been tested and found to comply with the limits for a Class B digital device, pursuant to part 15 of the FCC Rules. These limits are designed to provide reasonable protection against harmful interference in a residential installation. This equipment generates, uses and can radiate radio frequency energy and, if not installed and used in accordance with the instructions, may cause harmful interference to radio communications. However, there is no guarantee that interference will not occur in a particular installation. If this equipment does cause harmful interference to radio or television reception, which can be determined by turning the equipment off and on, the user is encouraged to try to correct the interference by one or more of the following measures:

- Reorient or relocate the receiving antenna.
- Increase the separation between the equipment and receiver.
- Connect the equipment into an outlet on a circuit different from that to which the receiver is connected.
- Consult the dealer or an experienced radio/TV technician for help.

Any changes in this certified device could void your legal right to operate it.

Innovation, Science and Economic Development (ISED) compliance statement

This device contains licence-exempt transmitter(s)/receiver(s) that comply with Innovation, Science and Economic Development Canada's licence-exempt RSS(s). Operation is subject to the following two conditions:

(1) This device may not cause interference.
(2) This device must accept any interference, including interference that may cause undesired operation of the device.

INTRODUCTION

This USER'S GUIDE explains how to handle DPU-S445 thermal printer (hereinafter referred to as printer), specified AC adapter, specified battery charger, specified battery pack and specified AC cable (hereinafter, omit "specified").

Read through the SAFETY PRECAUTIONS and OPERATING PRECAUTIONS carefully before using the printer. Also read the instruction manuals of the optional equipment that you purchased with the printer.
Keep this user's guide in a place where it can be accessed quickly.
For more detailed technical information on this printer, refer to the *DPU-S445 SERIES THERMAL PRINTER TECHNICAL REFERENCE*.
The User's Guide consists of the following sections.

INTRODUCTION 1
SAFETY PRECAUTIONS 2
OPERATING PRECAUTIONS 9
1 PREPARATION 12
2 EACH PART OF PRINTER 13
3 POWER CONNECTION 16
4 PAPER SETTING 19
5 TEST PRINTING 21
6 FUNCTION SETTING 22
7 CONNECTING TO THE HOST DEVICE 31
8 RECHARGING THE BATTERY PACK 34
9 THERMAL HEAD MAINTENANCE 37
10 TROUBLESHOOTING 38
11 SPECIFICATIONS 39
12 OPTIONS AND CONSUMABLE PARTS 42

SAFETY PRECAUTIONS

The following symbols are used in this User's Guide in order to make use of the printer properly and prevent the printer from being damaged.

Follow the instructions marked with the symbol.

⚠ **WARNING**	Failure to follow the guidelines marked with this symbol could result in severe personal injury or death.
⚠ **CAUTION**	Failure to follow the guidelines marked with this symbol could result in minor personal injury or product and/or peripheral damage.

Symbol Examples

The symbol △ indicates caution (including danger and warning).
The example on the left indicates warning or caution.

The symbol ⃠ indicates prohibition.
The example on the left means prohibition of disassembling.

The symbol ● indicates requirement or what must be done.
The example on the left means "pull the power plug out of the outlet."

⚠WARNING

DO NOT use the printer, the AC adapter, the AC cable, battery pack and the battery charger in countries where these items do not comply with the regulations. See Section 11 SPECIFICATIONS, List of Compliance with Regulation.
Doing so, we do not assure the safety of these products and you will be responsible for violation of regulations.

POWER OFF the printer, unplug the power cable from the power outlet, and remove the battery pack in any of the following cases:

- The printer does not recover from an error.
- Smoke, strange noise, overheat or smells erupt from the printer.
- A piece of metal or any liquid touches the internal parts or slot of the printer.
- Case is broken.

Doing so may cause fire or electric shock. Please contact your vender to repair the products.

DO NOT insert any foreign objects such as a piece of metal or any liquid in the internal parts or slot of the printer.
Doing so may cause fire or electric shock.

DO NOT disassemble or remodel the printer. DO NOT REPAIR THE PRINTER YOURSELF.
Doing so may cause fire, a failure or other accidents.

DO NOT use an AC adapter, AC cable, battery charger or battery pack other than that which is specified.
Doing so may cause explosion, overheating or fire leading to serious accidents.

DO NOT use any power supply of the AC adapter other than specified range of one.
Doing so may cause fire, a failure or other accidents.

DO NOT touch the output terminal or metallic area of the connector to avoid short-circuiting.
Doing so may cause fire, a failure or other accidents.

DO NOT connect except specified battery pack with the battery charger. Doing so may cause explosion, overheating or fire leading to fire or injury.

DO NOT put the printer into water in a place where it could get wet. Doing so may cause fire, a failure or other accidents.

DO NOT touch the printer by wet hand.
If not, it might cause electric shock.

POWER OFF the printer before removing/inserting the battery pack.
If not, it might cause electric shock.

UNPLUG the AC plug from the outlet when there is any AC cable damaged.
Doing so may cause fire, a failure or electric shock.

Keep the AC plug of the AC cable away from dust and metallic materials.
If not, it might cause fire or electric shock.

PLUG the AC plug of the AC cable completely.
If not, it might cause fire or electric shock.

DO NOT destroy the AC cable or plug. Moreover, DO NOT bend, pull or twist the AC cable forcibly, or place heavy object on the cable.
Doing so may cause fire, a failure or electric shock.

UNPLUG the AC cable from the outlet, do not pull on the cable but hold onto the plug.
Exposure or disconnection of the cable might cause fire or electric shock.

The antenna(s) used for this transmitter must be installed to provide a separation distance of at least 20 cm from all persons and must not be co-located or operating in conjunction with any other antenna or transmitter.

⚠ CAUTION

If the printer is not used for a long time, unplug the AC plug from the outlet and remove the battery pack from the printer.
If not, it might cause fire or electric shock.

When cleaning the printer, unplug the AC plug from the outlet and remove the battery pack from the printer.
If not, it might cause fire or electric shock.

Keep the printer out of the reach of children.
If not, it might cause injury.

DO NOT subject the printer to the following places as it may lead to fire, a failure or injury.

- Places of direct sunlight or high temperature
- Places of extreme humidity or any place where it can possibly be splashed by any liquids.
- Places with strong vibration or is inclined.

DO NOT cover the printer with any clothes.
Doing so may cause fire or a failure.

NEVER touch the thermal head immediately after printing because it becomes very hot. Make sure that the thermal head is cool before clearing a paper jam or cleaning the thermal head.
Doing so may cause injury.

NEVER touch the portions such as the thermal head or the paper sensor or the platen roller directly while opening the paper cover to install the paper for example.
Doing so may cause injury or other accidents.

DO NOT touch the cutter.
Doing so may cause injury.

Be sure to hold the battery cover to the printer when the battery pack is inserted in the printer.
Fall of the battery pack due to the battery cover slid off may cause injury or any damages.

DO NOT make your hair, etc. which are easily entangled in the printer approach to the printer during the operation.
Doing so may cause injury.

For North American – Use only CSA/UL Certified power supply cord set, Polarized, Type SPT-2 or heavier, minimum No. 18 AWG copper, rated 125 or 250 V, minimum 1 A, minimum 6 ft (1.8 m), maximum 10 ft (3 m) long.
For Other Country – Must comply with requirements set out by the Safety Approval/Certification Organization in each country of use.

Precautions in the Battery pack (Option)

⚠WARNING

If you find any of the following abnormalities in the battery pack, remove the battery pack from the printer and keep away from fire.

- When the battery pack gave out a nasty smell, reached an extraordinarily high temperature or showed any unusual sign.
- When the battery pack case was broken.
- When leakage was found.

Doing so may cause liquid leakage, explosion, overheating or fire leading to fire or injury.

NEVER disassemble, remodel, or solder the battery pack.
Doing so may cause liquid leakage, explosion, overheating or fire leading to fire or injury.

DO NOT charge the battery pack except by specified battery charger.
Doing so may cause liquid leakage, explosion, overheating or fire leading to fire or injury.

DO NOT touch the metallic area of the battery pack to avoid shortcircuiting.
Doing so may cause overheating, fire or electric shock leading to fire or injury.

DO NOT throw the battery pack into fire and DO NOT heat it.
Doing so may cause liquid leakage, explosion, overheating or fire leading to fire or injury.

DO NOT charge the battery pack in a place at 40°C / 104°F or more under burning scorching or in the close vicinity of fire.
Doing so may cause liquid leakage, explosion, overheating or fire leading to fire or injury.

DO NOT apply strong impact to the battery pack with a hammer or a nail, and DO NOT crush it.
Doing so may cause liquid leakage, explosion, overheating or fire leading to fire or injury.

DO NOT put the battery pack into water. Always keep it away from rain and water.
Doing so may cause liquid leakage, explosion, overheating or fire leading to fire or injury.

DO NOT touch the battery pack by wet hand.
Doing so may cause electric shock or a failure.

CAUTION

When leaking liquid from battery pack gets into eyes, flush them immediately with clean water and see a doctor immediately.
Otherwise it may cause vision loss.

When leaking liquid from battery pack contacts your skin or clothing, flush them immediately with clean water.

Keep the battery pack away from children.
If not, it might cause injury.

DO NOT subject the battery pack to the following places as it may lead to liquid leakage, explosion, overheating or fire leading to fire or injury.

- Places of direct sunlight or high temperature
- Places of extreme humidity or any place where it can possibly be splashed by any liquids.
- Places with strong vibration or is inclined.

OPERATING PRECAUTIONS

Please follow the precautions below to enjoy and maintain the full performance of the printer.

Using the Printer

- Be careful not to drop or bump the printer on a hard surface.
- DO NOT install the printer in direct sunlight or such areas. Suitable environment for the use of the printer is as follows:
  · Ambient temperature: 0°C to 50°C (32°F to 122°F)
  · Relative humidity: 30%RH to 80%RH (noncondensing)
  See the Technical Reference for details of applicable humidity at each temperature.
- DO NOT install the printer near devices that generate strong electromagnetic fields such as a copy machine.
- DO NOT install the printer in a location that is subject corrosive gas or siloxane and so on.
- DO NOT connect the AC cables to the same outlet with devices that generate noise.
- DO NOT open the paper cover during printing.
- DO NOT remove or reinstall the interface cable during printing or transmission. DO NOT touch the connectors of the interface cable during printing.
- DO NOT cut any cut paper or label paper with the paper cutter installed in the paper outlet. Failure to follow this instruction may cause a cutting error or make the cutting edge dull due to label paper adhesive sticking to the cutter.
- Switch the power off when not in use.
- Clean the printer using soft, lint-free cloth. DO NOT use alcohol or other solvent.
- Before use, always clean the terminals using a dry, soft, lint-free cloth. If the terminals are dirty, it may not be possible to obtain proper contact.
- When cleaning the thermal head, wipe the thermal head with a cotton swab or other soft material.
- Remove the battery pack from the printer if the printer is not used for a long time. If not, it may cause overdischarge and shorten life span of the battery pack.
- Store the battery pack in cool place. DO NOT store the battery pack for long time with fully charged condition because it may shorten life span of the battery pack.
- The battery pack should be recharged at 0°C to 40°C (32°F to 104°F) for optimum performance.

- The AC adapter, the battery charger and the battery pack may become warm when in use. This is normal and is not a malfunction.
- When the battery pack is used at low temperature, the length of time the printer can be used may be shortened.
- High-print-rate printing or using the printer under low temperature condition might cause irregular printouts or generate loud noise. This is not a failure in the printer, but an inherent paper phenomenon.
- Bluetooth model uses 2.4GHz frequency range, so if Bluetooth is used around any equipment with the same frequency range such as wireless LAN (IEEE802.11b/g/n) or microwave oven, radio frequency interference may occur and the communication may become unstable. When it happens, turn off the interfering equipment or increase the distance. In addition, shorten the distance between the host device and the printer.
- When handling this product, be aware of static electricity. If the static electricity is discharged, this could cause communication failure. When this problem occurs, disconnect the USB connector that is connected to the host device and wait few seconds before connect it again.

Thermal Paper Handling

- Store the thermal paper in a cool, dry, and dark place.
- DO NOT rub the thermal paper with hard objects.
- DO NOT leave the thermal paper near organic solvents.
- DO NOT allow plastic film, erasers, or adhesive tape to touch the thermal paper for long periods.
- DO NOT stack the thermal paper with diazo copies immediately after copying or wet- type copies.
- DO NOT use chemical glue.
- Always use the specified thermal paper. See Section 12, Options and Consumable Parts, for details.

Precautions on Discarding

When discarding used printers, discard them according to the disposal regulations and rules of each respective district.

Notations Used in this User's Guide

The following two types of notations are used throughout this User's Guide to denote items of caution and items to remember:

NOTE

- Operation Precautions

This box contains items that when not followed may lead to a malfunction or to a deterioration of performance.

HINT

- Items To Remember

This box contains helpful hints to remember when using the printer.

1 PREPARATION

Once you have opened the carton, make sure it contains the printer and all accessories.

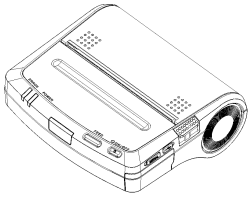

Printer

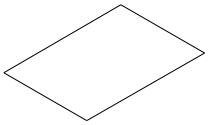

Quick Start Guide
(1 sheet)

Safety Precautions
1 set (3 sheets)

Keep the package and packing materials for future transportation or long-term storage. The following are available as options:

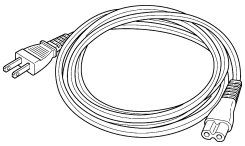

Specified AC cable

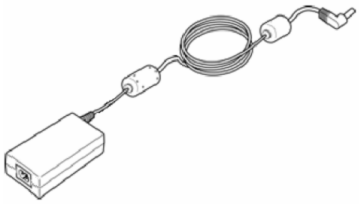

Specified AC adapter

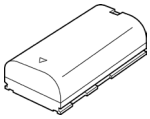

Specified Battery pack

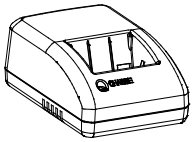

Specified Battery charger

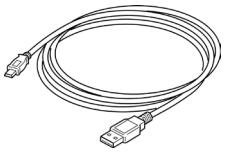

Specified Interface cable
(USB)

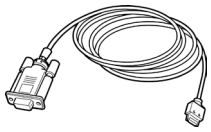

Specified Interface cable
(Serial)

The AC adapter and the battery charger is not bundled with an AC cable. Be sure to purchase our specified options. Refer to 11 SPECIFICATIONS for using the options in the countries which have complied with regulations.

2 EACH PART OF PRINTER

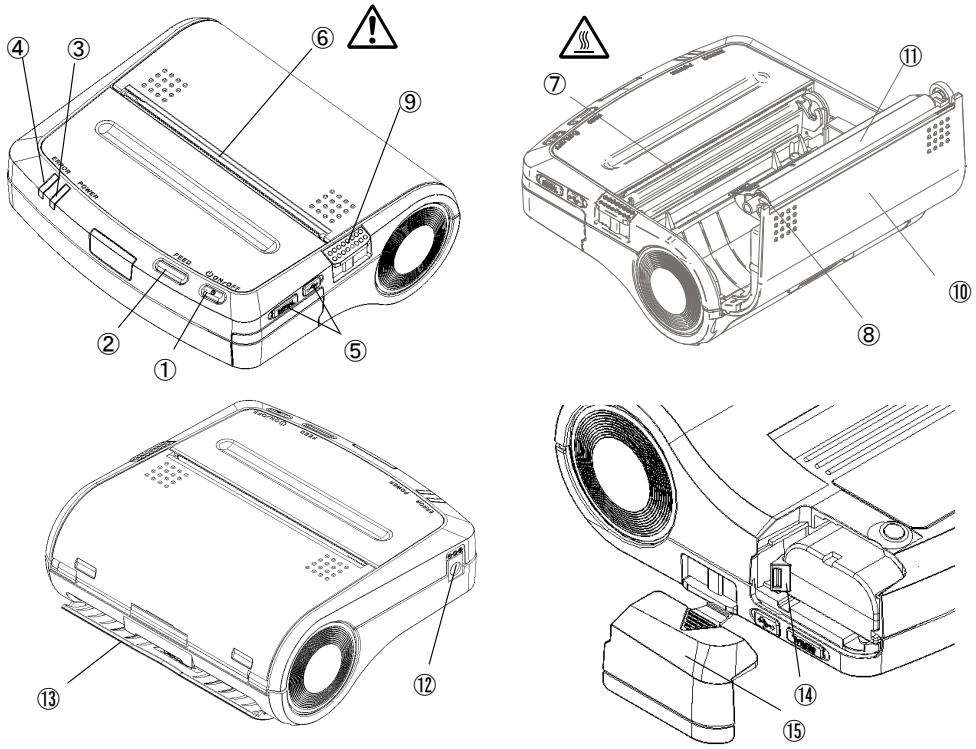

(1) POWER switch

The POWER switch turns the printer ON or OFF. To turn the printer on, hold down the POWER switch until the POWER lamp lights. To turn the printer off, hold down the POWER switch until the POWER lamp goes off.

(2) FEED switch

In the Mark Roll Paper mode, the printer feeds the thermal paper until paper mark detection by pressing this switch once. In the other condition, the printer feeds a small amount of thermal paper by pressing this switch once and the switch is held down, the thermal paper is fed continuously.

(3) POWER lamp

The POWER lamp lights when the printer turns on. For more details, see "Lamp Display" on page 15.

(4) ERROR lamp

The ERROR lamp lights when something is wrong with the printer. For more details, see "Lamp Display" on page 15.

(5) Interface connector

The interface connector connects with the interface cable. Open the rubber cover and insert the connector.

(6) Paper outlet ⚠

Paper port with a paper cutter.

(7) Thermal head ⚠

The thermal head prints characters on the thermal paper. Note that the thermal head is very hot immediately after printing.

(8) Paper sensor

The sensor that detects thermal paper existence or paper mark.

(9) Paper cover open button

The button that is used as opening the paper cover when setting the thermal paper.

(10) Paper cover

The platen roller is released from the thermal paper after opening this cover. Open this cover to replace the thermal paper or to clean the thermal head.

(11) Platen roller

The platen roller brings the thermal paper in contact with the thermal head. The platen roller is turned to feed the thermal paper.

(12) Power connector

The power connector connects the AC adapter to this connector.

(13) Paper slot

Paper inlet for the cut paper.

(14) Battery release lever

Releases the battery pack from the printer.

(15) Battery cover

The battery cover is attached on the printer to secure the battery pack.

Lamp Display

Lamp display	POWER lamp (Green)	ERROR lamp (Orange)
Power OFF	Off	Off
Power ON (Print-ready)	On	Off
Initializing	On	On
Out-of-paper	On	Blink
Paper cover open	On	Blink twice
Battery low, power failure	Blink	On
Thermal head temperature error	Blink twice	On
Recharging	Blink	Off
Pairing mode *	Blink twice	Off
Function setting mode	Off	On
Function setting mode shifting	Blink	Blink
FLASH memory accessing	Short blink	Short blink
Hardware error	Off	Blink

*: Bluetooth-supporting model only.

Display Pattern ○: On, ─: Off

Items	Pattern
Blink	─ ○ ─ ○ ─ ○ ─ .....
Short blink	○─○─○─○─○─○─○─○─○─○ .....
Blink twice	○─○ ─ ○─○ ─ ○─○ ─ .....

3 POWER CONNECTION

The printer can be powered with a battery pack or an AC adapter.
Always refer to Section 11 SPECIFICATIONS before using the battery pack and the AC adapter.

Installing a Battery Pack

The battery pack should be fully recharged. See Section 8, Recharging the Battery Pack, for details on the recharging method.

NOTE
- Before installing or removing the battery pack, turn the printer off.
- If the printer is not used for a long time, remove the battery pack from the printer.

Installing the battery pack

Remove the battery cover.
Insert the battery pack in the direction of the arrow so that the printer connection terminal contacts the connection terminal of the battery pack.
Be sure to lock the battery release lever and the battery pack.

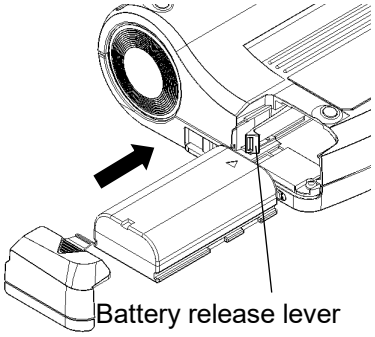

Removing the battery pack

Turn the printer off.
Take the battery cover off and slide the battery release lever in the direction of the arrow.
So the spring in the printer pushes the battery pack out.

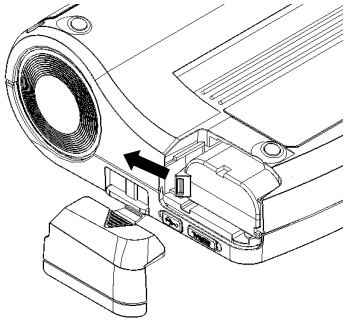

HINT

- If the battery pack starts to run out soon, it means that the battery life has expired. Purchase a new battery pack.
- When used in the condition of low temperature, operation time of the printer is shorter than average.
- Even if the battery pack is not used, its performance will deteriorate with time.
- If the Auto Power Off is Enabled, the printer turns off automatically when it is not operated for 30 minutes to save the battery. See Section 6, Function Setting, for details on settings.
- Dispose the used batteries according to local regulations.

Connecting the AC Adapter

(1) Connect the AC cable to the AC adapter.

(2) Insert the DC jack of the AC adapter to the power connector of the printer.

(3) Insert the AC plug of the AC cable to an electric outlet.

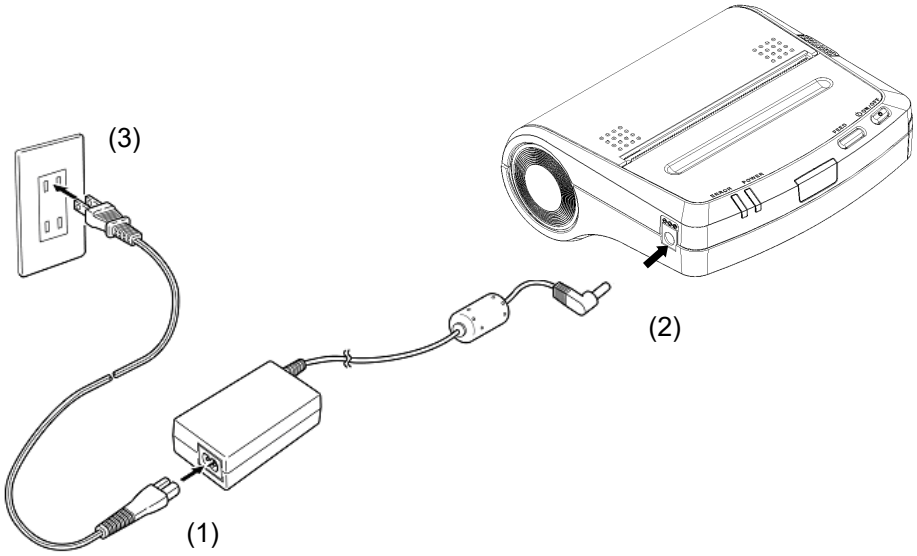

NOTE

- Before installing or removing the AC adapter, turn the printer off.
- If the printer is not used for a long time, unplug the AC cable from the outlet.

HINT

- If the Auto Activation by AC is enabled, the printer turns on automatically when the AC cable of the AC adapter inserts to the outlet. See Section 6 Function Setting for details on settings.

4 PAPER SETTING

This printer can feed cut paper and paper roll. The printer function setting for cut paper is different from that for paper roll. See Section 6 Function Setting for details.

Setting Cut Paper

(1) Turn the printer on.
(2) If the printer has been stored without thermal paper, open and close the paper cover (see Section 2 EACH PART OF PRINTER) before setting the cut paper.
(3) Insert the cut paper into the paper slot in the printer until it stops with its printable surface facing down.
(4) The printer detects the thermal paper and loads it automatically.
(5) To discharge the thermal paper from the printer, hold down the FEED switch.

Place a cut paper with the paper position detection mark facing up.

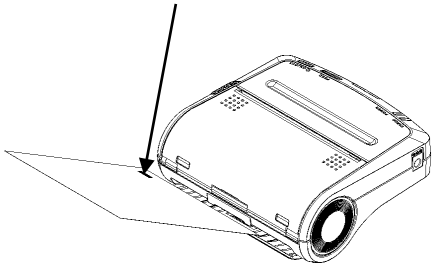

CAUTION

◆Take care not to get your fingers caught in the printer when loading the thermal paper.

NOTE

- Insert the thermal paper into the paper slot straight. If it is loaded askew, a paper feed error occurs.
- DO NOT block the paper outlet or hold the thermal paper that is being loaded. Otherwise, it may cause a paper jam.

HINT

- Marks for paper position detection are printed on the back of the specified paper. When the printer detects the mark, it enters print-ready mode.
- If the printer does not detect a mark, the ERROR lamp blinks. Press the FEED switch once or turn the printer off and on again to clear the error.

Setting Paper roll

(1) Press the paper cover open button to open the paper cover in the direction of the arrow.
(2) Install the paper roll to the paper holder and make sure that the tip of the thermal paper 5 cm or longer appears from the paper outlet and straighten the paper setting.
(3) Certainly press both sides of the paper cover to set the printer.
(4) If the paper roll with mark is used, press the FEED switch once for feeding to home position.

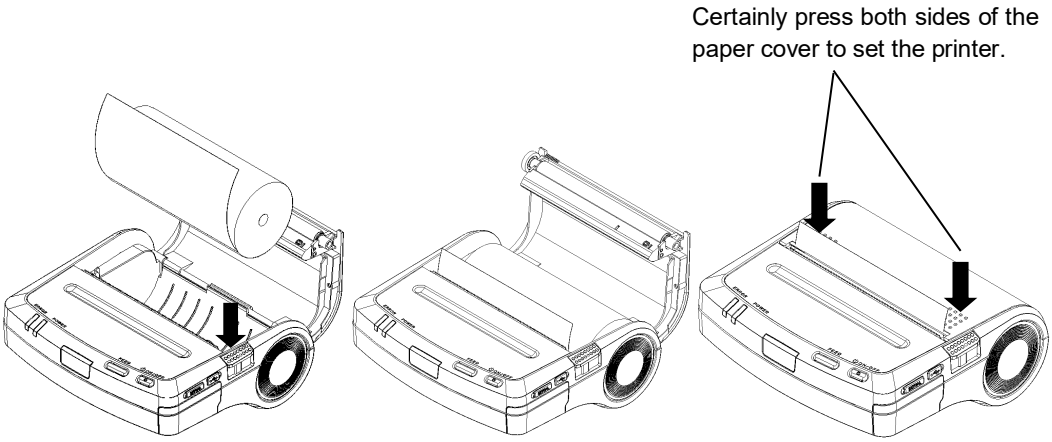

NOTE

- DO NOT block the paper outlet or hold the thermal paper that is being loaded. Otherwise, it may cause a paper jam.
- DO NOT touch the platen roller or the printer gear. If doing so, this may result in poor print quality or malfunction of the printer.

HINT

- When using the printer with the label that is in the thermal head and platen roller for a long time, it may cause paper feeding error. Open and close the paper cover to release the thermal head and label, and then press the FEED switch to feed the label home position before using.

5 TEST PRINTING

After loading thermal paper in the printer, perform test printing. In test printing, the printer's function setting and character strings for testing are printed.

(1) Make sure that the thermal paper is loaded in the printer and the printer is off. If the thermal paper is not loaded, load the thermal paper as instructed in Section 4, Paper Setting, and turn the printer off.
(2) Press the POWER and FEED switches at the same time. When the POWER lamp lights, release the POWER switch, then the FEED switch.
(3) Several dozens of lines of text are printed.

```
DPU-S445
[Ver.*.**]  **.***.****
Copyright (C) : SII
*************************
      .
      .
      .
```

(4) After test printing, the printer goes into print-ready mode.

6 FUNCTION SETTING

This printer can be set various function according to operating conditions or uses. The settings are stored in the software DIP switches (hereinafter referred to as “SWDIP switch”) in the FLASH memory of printer. They can be set by using switches, software, or inputting command.
This manual describes how to set functions by using switches.

NOTE

- Be sure to set the directed value as "Fixed" according to 0 or 1 in list so that the printer works correctly.

HINT

- See the Technical Reference for details on function setting with commands.
- The memory switch can also be set from software. Download software from the download page listed on the rear cover.
  The following software can be set.
  - ・For Windows:
    "Function Setup (Setup)" in the "Device Settings" that can be started from the printer property in the printer driver
  - ・For iOS and Android:
    App "SII DPU-S Utility" provided by App Store or Google Play

Function Setting Mode

The printer must be in the function setting mode to set functions with switches.
To enter the function setting mode, do as follows:

(1) Make sure that the thermal paper is loaded in the printer and the printer is off. If the thermal paper is not loaded, load the thermal paper as described in Section 4, Paper Setting, and then turn the printer off.

HINT

- If an error occurs in the function setting mode, the POWER and ERROR lamps blink 3 to 4 times and the power is turned off.

(2) Press the POWER and FEED switches at the same time. When the POWER lamp and the ERROR lamp light, and six seconds later the POWER and ERROR lamps start blinking, release your fingers from both of the switches.

(3) If the message shown at the following is printed, press the FEED switch.

```
Select Function
Setting Mode:      Feed SW
HEX Dump Mode: Power SW
```

HINT

- The printer enters the HEX Dump mode by pressing the POWER switch. This mode can be checked to see the printer's transmission status. See the Technical Reference for details.
- If you do not press any switch within 30 seconds after a message is printed, the printer turns off.
- When the POWER and ERROR lamps start to blink, release your finger from the POWER and ERROR switches within 5 seconds. If it is ongoing, the printer exits function setting mode. In such a case, turn the power off and try the procedure from (1) again.

(4) If the message shown at the following is printed, press the FEED switch.

```
[SETTING MODE]
Yes: Feed SW / No: Power SW
```

HINT

- If the POWER switch pressed, the printer exits the function setting mode and turns the power off.
- If you do not press any switch within 30 seconds after a message is printed, the printer turns off.

The printer is now in the function setting mode. You can set functions by pressing switches.

Changing Settings

In the function setting mode, you can initialize or modify settings. To set the settings to defaults, perform operation (1). To change settings, perform operation (2).

(1) Initializing SWDIP switch settings

1. When the message shown at the following is printed in the function setting mode, press the FEED switch.

   Load Default Setting?
   Yes: Feed SW / No: Power SW

2. When the message shown at the following is printed, the printer turns off. The settings are set to defaults. Initialization is completed.

   Default Setting Saved.
   Setting Mode Finished.

(2) Changing SWDIP switch settings

When the message shown at the following is printed in the function setting mode, press the POWER switch.

Load Default Setting?
Yes: Feed SW / No: Power SW

HINT

- There are SWDIP switches from 1 to 4 and 10 in the printer, so set 8 bits within SWDIP switches respectively.
- In function setting mode, the POWER lamp blinks once by pressing either the POWER switch or the FEED switch. Be sure to confirm the POWER lamp blinking in order to ensure proper operation.

Operation 1: SWDIP switch selection

If pressing the FEED switch when the message shown at the following is printed, the function setting mode goes to operation (2).

If pressing the POWER switch instead of the FEED switch, the details of the printed SWDIP switch (SWDIP switch 1) are not changed, and the next SWDIP switch is selected (operation 1).

```
DIP Switch setting mode.
DIP SW-1=********
Change Setting?
Yes: Feed SW / No: Power SW
```

HINT

- "********" in the message indicates the setting of the SWDIP switch. The leftmost bit is the most significant bit (SWDIP*-8) and the rightmost bit is the least significant bit (SWDIP*-1).
- If SWDIP switches 1 to 4 and 10 are skipped, the function setting mode can be terminated (operation 3).

Operation 2: SWDIP switch setting

(1) When the message shown at the following is printed, set the bits from the most significant bit (SWDIP*-8) to the least significant bit (SWDIP*-1).

```
Input 8 bits.
1: Feed SW / 0: Power SW
```

To set 1: Press the FEED switch.
To set 0: Press the POWER switch.
For example, to set 10101110, press the switches in the following sequence: FEED, POWER, FEED, POWER, FEED, FEED, FEED, POWER.

(2) When the switches are pressed eight times (for eight bits), the following message is printed.

```
DIP SW-1=********
Save Setting?
Yes: Feed SW / No: Power SW
```

When the FEED switch is pressed, the message shown at the following is printed, and the setting is saved.

```
DIP SW-1=********Saved.
```

When you press the POWER switch instead of the FEED switch, the message shown at the following is printed and the setting is not changed.

```
DIP SW-1 Not Changed.
```

After this operation, the function setting mode goes to the next SWDIP switch (operation 1).

After setting SWDIP switch 1 to 4 and 10, you can exit function setting mode (operation 3).

HINT

- "********" in the message indicates the setting of the SWDIP switch. The leftmost bit is the most significant bit (SWDIP*-8) and the rightmost bit is the least significant bit (SWDIP*-1).

Operation 3: Exiting function setting mode

If pressing the FEED switch when the message shown at the following is printed, the printer returns to operation (1) and sets SWDIP switch 1 again.

```
DIP Switch setting mode.
Continue: Feed SW
Quit: Power SW
```

If pressing the POWER switch, the message shown at the following is printed. The printer leaves the function setting mode and turns it off. The function setting is now completed.

```
Setting Mode Finished.
```

HINT

- The settings can be confirmed by performing test printing after the function setting.

SWDIP Switch Setting List

: Default settings

SWDIP switch 1

SW DIP	Function	Setting															
1-8	Data control	1	Busy														
		0	Xon/Xoff														
1-7	Stop Bit	1	1 bit														
		0	2 bits														
1-6	Parity	0	None	0	Odd	1	None	1	Even								
1-5		0		1		0		1									
1-4	Bit length	1	8 bits														
		0	7 bits														
1-3	Baud Rate (bps)	0	1200	0	2400	0	4800	0	9600	1	19200	1	38400	1	57600	1	115200
1-2		0		0		1		1		0		0		1		1	
1-1		0		1		0		1		0		1		0		1	

SWDIP switch 2

SW DIP	Function	Setting							
2-8	Auto Status Output	1	Disable						
		0	Enable						
2-7	Kanji Code	1	JIS code						
		0	Shift-JIS Code						
2-6	Font Size	1	24 dots						
		0	16 dots						
2-5	Auto Power Off	1	Disable						
		0	Enable						
2-4	Character Set	1	ANK						
		0	IBM Compatible						
2-3	Auto Loading	1	Enable						
		0	Disable						
2-2	Data Input Mode	0	Serial/ USB	0	Serial/ USB	1	Serial/ USB	1	Bluetooth/ USB*
2-1		0		1		0		1	

*: Bluetooth-supporting model only.
Bluetooth-supporting model is shipped with this setting (Bluetooth/USB) at factory shipment.

SWDIP switch 3

<table>
<tr><th>SW DIP</th><th>Function</th><th colspan="8">Setting</th></tr>
<tr><td>3-8</td><td>Reserved</td><td>1</td><td colspan="7">Fixed to 1</td></tr>
<tr><td rowspan="2">3-7</td><td rowspan="2">Print Density *3</td><td>0</td><td rowspan="2">95%</td><td>0</td><td rowspan="2">100%</td><td>1</td><td rowspan="2">105%</td><td>1</td><td rowspan="2">110%</td></tr>
<tr><td>0</td><td>1</td><td>0</td><td>1</td></tr>
<tr><td rowspan="3">3-5</td><td rowspan="7">Paper Select*1 *3</td><td>0</td><td rowspan="4">PD160R-N</td><td>0</td><td rowspan="4">TC98KS-LH</td><td>0</td><td rowspan="4">P350</td><td>0</td><td rowspan="4">Reserved</td></tr>
<tr><td>0</td><td>0</td><td>1</td><td>1</td></tr>
<tr><td rowspan="2">3-4</td><td>0</td><td>1</td><td>0</td><td>1</td></tr>
<tr><td>1</td><td rowspan="3">KT55F20</td><td>1</td><td rowspan="3">TF8067</td><td>1</td><td rowspan="3">TL69KS-HW76B</td><td>1</td><td rowspan="3">TF50KS-E2D (TP-341L-1)</td></tr>
<tr><td rowspan="2">3-3</td><td>0</td><td>0</td><td>1</td><td>1</td></tr>
<tr><td>0</td><td>1</td><td>0</td><td>1</td></tr>
<tr><td>3-2</td><td rowspan="2">Paper Mode</td><td>0</td><td rowspan="2">Cut Paper</td><td>0</td><td rowspan="2">Roll Paper</td><td>1</td><td rowspan="2">Mark Roll Paper*2</td><td>1</td><td rowspan="2">Reserved</td></tr>
<tr><td>3-1</td><td>0</td><td>1</td><td>0</td><td>1</td></tr>
</table>

*1: See Section 12 OPTIONS AND CONSUMABLE PARTS for details of papers.

*2: For details, see DPU-S445 SERIES THERMAL PRINTER TECHNICAL REFERENCE.

*3: If too much energy is applied to the thermal head, it would shorten its life span and cause the paper feed problem. Set an accurate thermal paper selection and print density. If selecting the thermal paper that is different from the one specified in the thermal paper selection or in case of not setting the print density in 100%, verify the performance with your actual device before printing.

SWDIP switch 4

SW DIP	Function	Setting	
4-8	Bluetooth Link Key selection*3 (Bluetooth Link Key)	1	Disable
		0	Enable
4-7	Reserved	1	Fixed to 1
4-6	Busy Output When Error Occurs (Error)	1	Busy
		0	UnBusy
4-5	Mark Position Correct*1	1	Disable
		0	Enable
4-4	Reserved	1	Fixed to 1
4-3	Reserved	1	Fixed to 1
4-2	CTS Control	1	Disable
		0	Enable
4-1	Auto Activation by AC *2	1	Disable
		0	Enable

*1: When Paper Mode of SWDIP switch 3 is set as Mark Roll Paper, the printer operates paper feeding to backward approximately 5 mm just before printing process after operations such as the power on, resetting, FEED switch or page feed. If the function sets to Enable, be sure to send printing pattern that is longer than 5 mm. If the function sets to Enable while using the label paper, the length of label should be 40 mm or longer.

*2: If this setting is enabled, the printer turns on automatically when the AC cable of the AC adapter inserts to the outlet.

*3: Bluetooth-supporting model only. If this function is set to Enable, the printer saves the link key for Bluetooth connection. Saving the link key can connect to the host device without PIN code authentication.
Even if PIN code is not specified in advance, the printer processes PIN code as '0000'.

SWDIP switch 10

SW DIP	Function	Setting	
10-8	Reserved	1	Fixed
10-7	Reserved	1	Fixed
10-6	Reserved	1	Fixed
10-5	Reserved	1	Fixed
10-4	Reserved	1	Fixed
10-3	Reserved	1	Fixed
10-2	Auto Connection *	1	Disable
		0	Enable
10-1	Inquiry Response *	1	Always
		0	Pairing Mode

*: Bluetooth-supporting model only.

7 CONNECTING TO THE HOST DEVICE

This printer supports serial and USB communication through an interface cable. Moreover, the Bluetooth-supporting model supports Bluetooth (Ver.2.1+EDR) conformity wireless communication.
The printer function setting differs depending on the printer model and the communication method which shall be used. See Section 6 FUNCTION SETTINGS for details.

An interface cable is required to perform serial or USB communication. See Section 11 SPECIFICATIONS for details of interface specifications.

The communication speed might be reduced depending on data processing by software as well as print type and size.

NOTE: Standard model does not support wireless communication via Bluetooth.

HINT

- As soon as the USB interface cable connects the printer and the host device, USB communication mode is chosen automatically by the printer regardless of the communication mode set in the function setting. To use the communicate in other modes, do not connect the USB interface cable.

Serial/USB Communication with an Interface Cable

(1) Turn the printer off.
(2) Open the interface connector cover and connect the interface cable. The connector of serial interface cable has lock for preventing from falling off.
(3) Turn the printer on and send data from the host device to the printer.
(4) Verify that the data is printed correctly.
(5) The serial interface cable connector has a lock. To remove the cable, pull it out, while holding the lock. Pulling the connecter by force may cause connector damaged.

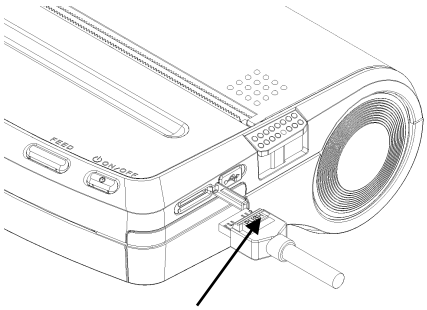

Release button to unlock

Serial interface cable

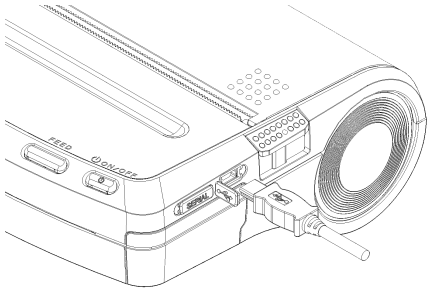

USB interface cable

NOTE

- When connecting or disconnecting the interface cable, hold the connector, not the cable.
- DO NOT connect the serial and USB interface cable at the same time. If doing so, the USB communication mode has priority over the serial communication.

Bluetooth-based Wireless Communication (Bluetooth-supporting model)

(1) Turn the printer off.
(2) Turn the printer on without connecting the USB interface cable to it.
(3) Turn the power on and pair with the host device.
At the factory shipment, Inquiry Response in SWDIP 10-1 is set as Always, so pair with the host device as it is.
When Inquiry Response in SWDIP 10-1 is set at pairing mode, the printer becomes pairing mode for about 60 seconds by pressing the POWER switch for about 7 seconds until the POWER lamp shows pairing mode (the lamp blinks twice) in (2).
The pairing is conducted by SSP (Simple Secure Pairing), however, PIN code is used when the host device does not support SSP. The default value of PIN code is "0000".
(4) Check communication status from the host device.
(5) Send data from the host device to the printer. Verify that the printer prints it correctly.

WARNING

- ◆The printer may affect medical or other electronic devices. Obtain information and data concerning influence due to radio interference from the respective manufacturers or dealers.
- ◆When using the printer in medical institutions, follow their guidelines.
- ◆POWER OFF the printer in an airplane for safety.
- ◆DO NOT use the printer in any area or district where its use is prohibited.

HINT

- The distance of communication is approx. 10 m. However, that distance may differ depending on the radio interference and environment.

8 RECHARGING THE BATTERY PACK

The battery pack is partially charged prior to shipping, and provides sufficient power to check the printer operation. To use the printer for an extended time, fully recharge the battery pack.

This battery pack does not need to be used up or discharged before recharging.
The battery pack can be recharged when it is installed in the printer connected with an AC adapter. The battery pack can also be recharged with the specified battery charger.

Recharging the Battery Pack in the Printer

An AC adapter and an AC cable are required to recharge the battery pack in the printer.

(1) Turn the printer off.
(2) Install the battery pack in the printer.
(3) Connect the AC adapter to the printer.
(4) Plug the AC plug of the AC cable to the outlet.
(5) Turn the printer on. After initialization, the POWER lamp starts blinking after lighting, recharging begins.
(6) The POWER lamp will continue to blink during recharging. When recharging is complete, the POWER lamp lights continuously. At this time, when the thermal paper is not set or the paper cover is opened, the ERROR lamp lights. The recharging time depends on the ambient temperature and the voltage level of the battery pack. Normally, it takes about 3 hours to recharge after running down a battery pack.

NOTE

- DO NOT remove the battery during recharging. If it is removed during recharging, remove the AC plug from the outlet immediately. Never touch the battery terminal.

HINT

- The printer can print or receive data while it is recharging the battery pack. During printing or receiving data, the POWER lamp lights continuously and the printer pauses to recharge. The printer recharges the battery again after printing and receiving data are completed.
- To stop recharging, press the POWER switch. The printer will turn off. To recharge the battery pack again, repeat the steps shown in (5).
- The battery pack should be recharged at 0°C to 40°C (32°F to 104°F) for optimum performance.
- If the Auto Activation by AC is Enabled, the printer turns on automatically when the AC cable of the AC adapter inserts to the outlet. See Section 6 Function Setting for details on settings.

Recharging with Specified Battery Charger

(1) Connect the AC cable to the AC adapter.
(2) Connect the DC jack of AC adapter to battery charger.
(3) Put the AC cable plug into the inlet.
(4) Install a battery pack in the battery charger. Make sure that electrodes of the battery pack contact the terminals of the metal on the battery charger.
(5) The battery charger CHARGE lamp (red) will light and the battery charger will start recharging.
(6) When the CHARGE lamp turns its lamp to green color, the battery pack is fully recharged.
(7) When recharging is complete, remove the battery pack.
(8) Unplug the AC plug of the AC cable to the outlet.

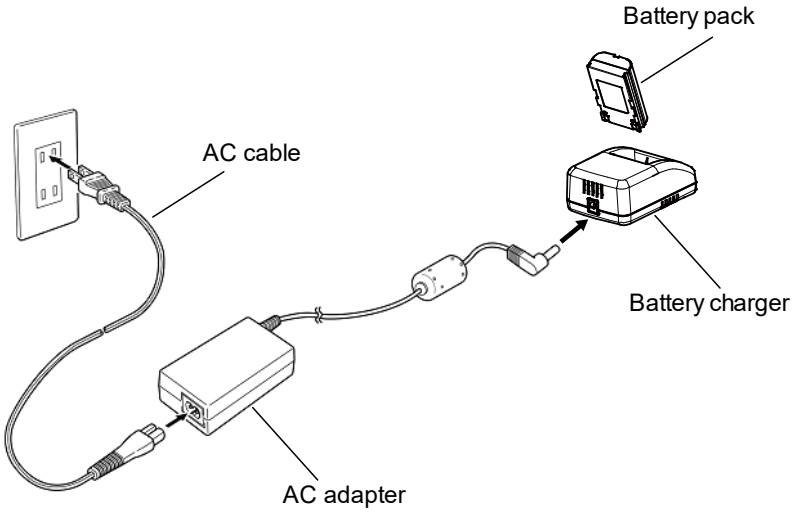

NOTE

- When the battery charger is connected to the AC adapter, do not bring any metal object into contact with the metal terminal.
- Unplug the battery charger from the outlet after using. Remove the recharged battery pack from the battery charger within 24 hours.

HINT

- The battery pack should be recharged at 0°C to 40°C (32°F to 104°F) for optimum performance.

9 THERMAL HEAD MAINTENANCE

The thermal head of this printer does not require user maintenance.
If paper dust accumulates, clean the thermal head to maintain maximum print quality for an extended time.

Cleaning the Thermal Head

(1) Turn the printer off.
(2) Unplug the AC plug of the AC cable to the outlet.
(3) Removed the battery pack from the printer.
(4) Open the paper cover.
(5) Clean the thermal head or the platen roller with a cotton swab moistened with a small amount of ethyl alcohol.
(6) Wait until any ethyl alcohol remaining on the thermal head and the platen roller evaporates completely, then close the paper cover.

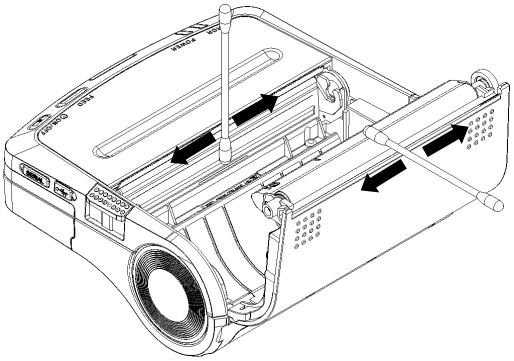

NOTE

- Clean the thermal head after it cools.
- Wipe the thermal head with a cotton swab or other soft material.
- DO NOT touch the gear of the platen roller. Doing so may cause loss of printing quality or a failure.

10 TROUBLESHOOTING

Check the following points before you make a request for repair.

□ The power does not turn on.

- Is specified AC adapter or battery pack being used ?
- Are the AC cable and AC adapter connected correctly ?
- Is the AC adapter connected to the printer correctly ?
- Is the battery pack sufficiently recharged ?

□ The printer does not print.

- Is the interface cable connected correctly ?
- Is the specifications of interface cable conformed to its specifications of the User's Guide being used ?
- Are used communication method and the function setting of the printer correct ?
- Is the Bluetooth communication status good ?
- Are the communication conditions for the printer and the host device correct ?
- Is specified paper being used ? Is the paper orientation (surface/back) correct ?

□ The ERROR lamp lights or the POWER lamp blinks.

- See the Lamp Display on page 15.
- Is the printer function setting correct ?

□ The battery pack cannot be installed.

- Is the battery pack correctly oriented ?
- Is the correct battery pack being used ?

□ The battery runs out soon even if recharged.

- Has the battery been recharged correctly ?
- If the battery pack is recharged correctly, but does not last for a long time, it is almost dead. Replace it with a new one.

11 SPECIFICATIONS

Printer Specifications

Item	Specification
Model	DPU-S445-00C-E (Standard model) DPU-S445-01C-E (Bluetooth-supporting model)
Printing method	Thermal
Characters per line	52*1
Character size (H × W) Standard size: (H × W) Kanji size:	 24 dots × 12 dots 24 dots × 24 dots
Dots available	832 dots
Dot density	8 dots/mm
Printing width / paper width	104 / 112 mm
Printing speed	90 mm/s maximum
Operating temperature	0°C to 50°C 32°F to 122°F
Related humidity*2	30%RH to 80%RH (no condensation)
Power consumption (Power off status)	0.099 W
Dimensions (W × D × H)	145 × 135 × 58 mm*3
Mass	Approx. 490 g (include battery pack)

*1: Standard size characters, character spacing is 4 dots.

*2: See the Technical Reference for details of applicable humidity at each temperature.

*3: Excluding projections

Specified AC Adapter Specifications (Option)

Item	Specification
Model	PW-D0940-W2
Input voltage	100-240 VAC, 50/60 Hz
Rated output	9.0 VDC, 4.0 A, 36.0 W
Operating temperature	0°C to 40°C 32°F to 104°F
Average active efficiency	88.303%
Efficiency at low load (10 %)	78.303%
Dimensions (W × D × H)	114 × 53 × 37 mm*
Mass	Approx. 318 g

*: Excluding cable

Specified Battery Pack Specifications (Option)

Item	Specification
Model	BP-L0725-A1
Battery	Lithium ion
Rated voltage	7.4 VDC
Rated capacity	2500 mAh
Operating temperature	0°C to 50°C (discharging) 32°F to 122°F (discharging) 0°C to 40°C (recharging) 32°F to 104°F (recharging)

Item	Specification
Model	BP-L0725-B1
Battery	Lithium ion
Rated voltage	7.4 VDC
Rated capacity	2500 mAh
Operating temperature	0°C to 50°C (discharging) 32°F to 122°F (discharging) 0°C to 40°C (recharging) 32°F to 104°F (recharging)

Item	Specification
Model	BP-L0725-C1
Battery	Lithium ion
Rated voltage	7.2 VDC
Rated capacity	2550 mAh
Operating temperature	0°C to 50°C (discharging) 32°F to 122°F (discharging) 0°C to 40°C (recharging) 32°F to 104°F (recharging)

Specified Battery Charger Specifications (Option)

Item	Specification
Model	PWC-L07C1-W1
Input voltage	9.0 VDC
Specified battery	BP-L0725-A1 BP-L0725-B1 BP-L0725-C1
Operating temperature	0°C to 40°C 32°F to 104°F
Dimensions (W × D × H)	70 × 100 × 40 mm
Mass	Approx. 120 g

Interface Specifications

· Serial interface

Item	Specification
Synchronous	Asynchronous system
Baud rate	1200, 2400, 4800, 9600, 19200, 38400, 57600 or 115200bps
Bit length	7 or 8 bits
Parity	None, Even or Odd
Data control	Busy or Xon/Xoff

· Connector terminals

No.	Name	I/O
1	NC	-
2	TxD	O
3	RxD	I
4	(connected to pin 6)	-
5	GND	-
6	(connected to pin 4)	-
7	CTS	I
8	RTS	O

3260-8S3 HIROSE ELECTRIC CO.,LTD. or corresponsive product.

· USB interface

Item	Specification
Version	Ver. 2.0
Printer data transmission mode	Bulk transfer (12M bps)

· Connector terminals

No.	Name
1	Vbus
2	D-
3	D+
4	NC
5	GND

Mini B type

· Bluetooth interface

Item	Specification
Version	Ver. 2.1+EDR
Transmitted electric power class	Class 2
Authentication	SSP, PIN code
Profile	SPP, iAP2

Countries in Which the Product Is Intended to Be Sold

The product is intended to be sold in the countries listed below.

✓: Countries in which the product is intended to be sold

Countries *1	DPU-S445-00C-E (Standard model)	DPU-S445-01C-E (Bluetooth-supporting model)	PW-D0940-W2*2 (Specified AC adapter)	BP-L0725-A1 BP-L0725-B1 BP-L0725-C1 (Specified battery pack)	PWC-L07C1-W1 (Specified battery charger)
Japan	✓	✓	✓	✓	✓
USA	✓	✓	✓	✓	✓
Canada	✓	✓	✓	✓	✓
EU, EFTA United Kingdom	✓	✓	✓	✓	✓

*1: Please ask your SII sales representative if you want to operate the products in other countries than listed above.

*2: The compliant AC cables differ from country to country. Please refer to the list below to find out which cable you need to connect in destination countries.

List of Specified AC cable

Countries	Model*
Japan	CB-JP04-18A-E
USA, Canada	CB-US04-18A-E
EU, EFTA	CB-CE01-18B-E
United Kingdom	CB-UK01-20A-E

*: Use the model only in countries listed above.

12 OPTIONS AND CONSUMABLE PARTS

Options

Name	Model
Specified Battery pack	BP-L0725-A1, BP-L0725-B1, BP-L0725-C1
Specified AC adapter	PW-D0940-W2
Specified Battery charger	PWC-L07C1-W1*1
Specified AC cable*2 For Japan For USA, Canada For EU, EFTA For United Kingdom Specified Serial cable	 CB-JP04-18A-E CB-US04-18A-E CB-CE01-18B-E CB-UK01-20A-E IFC-S01-1-E
Specified USB cable	IFC-U01-1-E

*1: When you are using PWC-L07C1-W1, specified AC cable and specified AC adapter PW-D0940-W2 are needed.

*2: The shape of the outlet differs in countries. Please confirm it before using.

Specified Thermal Paper

Model	Maker	Remark *
PD160R-N	Oji Paper	Use as the paper roll
TF50KS-E2D	Nippon Paper	Use as the paper roll
P350	Kanzaki Specialty Papers	Use as the paper roll
KT55F20	Papierfabrik August Koehler	Use as the paper roll
TF8067	Mitsubishi Paper Mills	Use as the cut paper
TC98KS-LH	Nippon Paper	Use as the cut paper
TL69KS-HW76B	LINTEC	Use as the label paper

*: Refer to the technical reference for more details.

If using the thermal paper that is not specified, quality of printing or specified life span of the thermal head would not be guaranteed.

Seiko Instruments Inc.
563, Takatsukashinden, Matsudo-shi,
Chiba 270-2222, Japan
Print System Division
Tel: +81-47-709-0925
Fax: +81-47-709-1793

Seiko Instruments U.S.A., Inc.
Thermal Printer Div.
21221 S. Western Avenue, Suite 250, Torrance, CA 90501, U.S.A.
Tel: +1-800-688-0817 Fax: +1-310-517-7779

Seiko Instruments GmbH (Economic operator)
Siemensstrasse 9, D-63263 Neu-Isenburg, Germany
Tel: +49-6102-297-0 Fax: +49-6102-297-50100
info@seiko-instruments.de

Seiko Instruments Trading (H.K.) Ltd.
7/F, Ying Tung Industrial Building, 802 Lai Chi Kok Road, Kowloon, Hong Kong
Tel: +852-2494-5160 Fax: +852-2424-0901

Seiko U.K. Limited (Authorized Representative in the United Kingdom)
SC House, Vanwall Road, Maidenhead, Berkshire, SL6 4UW

Download page: https://www.sii.co.jp/sps/eg/download/index.html

(Specifications are subject to change without notice.)