SII

USER'S GUIDE

Thermal Printer

RP-F10 SERIES

Read this USER'S GUIDE carefully before using the printer.
Keep this USER'S GUIDE in a place where it can be accessed quickly.

Seiko Instruments Inc.

Rev.01 March 2019
Rev.02 January 2020
Rev.03 August 2020
Rev.04 October 2021
Rev.05 December 2022
Rev.06 February 2023
Rev.07 April 2024
Rev.08 April 2025
Rev.09 July 2026

Copyright ©2019-2026 by Seiko Instruments Inc. All rights reserved.

The information contained herein is the property of SII and shall not be reproduced in whole or in part without prior written approval of SII.

SII reserves the right to make changes in the specifications and materials contained herein without notice and shall not be responsible for any damages (including consequential) caused by reliance on the materials presented, including but not limited to typographical, arithmetic, and listing errors.
This product is developed as a product for industrial equipment use.

SII is a trademark of Seiko Instruments Inc.
Bluetooth® is a registered trademark of Bluetooth SIG, Inc.
The N mark is a trademark or registered trademark of NFC Forum, Inc. in the United States and in other countries.
Android™ is a trademark of Google LLC.
IOS is a trademark or registered trademark of Cisco in the U.S. and other countries and is used under license.
All other trademarks are the properties of their respective companies.

Applied to only the model with Bluetooth:
contains FCC ID: SQK-MBH7BTZXXC2
contains IC: 337L-MBH7BTZXXC2

Applicable EC Directive and Standards

Product: Thermal Printer RP-F10 (Model with Bluetooth) (with AC adapter PW-G2421-W1/ PW-G2421-W2)

Directive:	Title
2014/53/EU	Radio Equipment Directive
2011/65/EU (Commission Delegated Directive (EU) 2015/863)	Restriction of the use of certain hazardous substances (RoHS) Directive

Standards
EN 301 489-1
EN 301 489-17
EN 300 328
EN 62368-1
EN IEC 63000

Restrictions: This product is for use only with nominal voltage in each country.

Product: Thermal Printer RP-F10 (with AC adapter PW-G2421-W1/ PW-G2421-W2)

Directive:	Title
2014/30/EU	EC Electromagnetic Compatibility Directive
2014/35/EU	EC Low Voltage Directive (with AC adapter only)
2011/65/EU (Commission Delegated Directive (EU) 2015/863)	Restriction of the use of certain hazardous substances (RoHS) Directive

Standards
EN 55032
EN IEC 61000-3-2
EN 61000-3-3
EN 55035
EN 62368-1 (with AC adapter only)
EN IEC 63000

Product: AC adapter PW-G2421-W1/ PW-G2421-W2

Directive:	Title
2014/30/EU	EC Electromagnetic Compatibility Directive
2014/35/EU	EC Low Voltage Directive
2011/65/EU (Commission Delegated Directive (EU) 2015/863)	Restriction of the use of certain hazardous substances (RoHS) Directive

Standards

EN 55032
EN IEC 61000-3-2
EN 61000-3-3
EN 55035
EN 62368-1
EN IEC 63000

Applicable UK Directive and Standards

Product: Thermal Printer RP-F10 (Model with Bluetooth) (with AC adapter PW-G2421-W1/ PW-G2421-W2)

Directive:

Radio Equipment Regulations 2017
The Restriction of the Use of Certain Hazardous Substances in Electrical and Electronic Equipment Regulations 2012

Standards

BS EN 301 489-1
BS EN 301 489-17
BS EN 300 328
BS EN 62368-1
BS EN IEC 63000

UK
CA

Restrictions: This product is for use only with nominal voltage in each country.

Product: Thermal Printer RP-F10 (with AC adapter PW-G2421-W1/ PW-G2421-W2)

Directive:

Electromagnetic Compatibility Regulations 2016
Electrical Equipment (Safety) Regulations 2016
The Restriction of the Use of Certain Hazardous Substances in Electrical and Electronic Equipment Regulations 2012

Standards

BS EN 55032
BS EN IEC 61000-3-2
BS EN 61000-3-3
BS EN 55035
BS EN 62368-1 (with AC adapter only)
BS EN IEC 63000

Product: AC adapter PW-G2421-W1/ PW-G2421-W2

Directive:

Electromagnetic Compatibility Regulations 2016
Electrical Equipment (Safety) Regulations 2016
The Restriction of the Use of Certain Hazardous Substances in Electrical and Electronic Equipment Regulations 2012

Standards

BS EN 55032
BS EN IEC 61000-3-2
BS EN 61000-3-3
BS EN 55035
BS EN 62368-1
BS EN IEC 63000

Federal Communications Commission (FCC) compliance statement

NOTE: This equipment has been tested and found to comply with the limits for a Class A digital device, pursuant to part 15 of the FCC Rules. These limits are designed to provide reasonable protection against harmful interference when the equipment is operated in a commercial environment. This equipment generates uses and can radiate radio frequency energy and, if not installed and used in accordance with the instruction manual, may cause harmful interference to radio communications. Operation of this equipment in a residential area is likely to cause harmful interference in which case the user will be required to correct the interference at his own expense.

The changes or modifications not expressly approved by the party responsible for compliance could void the user's authority to operate the device.

Innovation, Science and Economic Development (ISED) compliance statement

This device contains licence-exempt transmitter(s)/receiver(s) that comply with Innovation, Science and Economic Development Canada's licence-exempt RSS(s). Operation is subject to the following two conditions:

(1) This device may not cause interference.

(2) This device must accept any interference, including interference that may cause undesired operation of the device.

1. INTRODUCTION

This manual describes how to handle RP-F10 series thermal printer (hereinafter referred to as printer), AC adapter and AC cable.

Read through "2. SAFETY PRECAUTIONS" and "3. OPERATING PRECAUTIONS" carefully before using the products, and handle them safely and properly.
Keep this manual in a place where it can be accessed quickly.

This manual consists of the following sections.

1. INTRODUCTION 1
2. SAFETY PRECAUTIONS 2
3. OPERATING PRECAUTIONS 5
4. PREPARATION 8
5. IDENTIFYING MODEL TYPE 10
6. EACH PART OF PRINTER 11
7. POWER CONNECTION 15
8. LOADING THERMAL PAPER 16
9. PREVENTION AND TREATMENT OF PAPER JAM 20
10. TEST PRINT 22
11. FUNCTION SETTINGS 26
12. CONNECTING TO HOST DEVICE 29
13. CONNECTING TO PERIPHERALS 34
14. SETTINGS WHEN USING 58mm PAPER WIDTH 39
15. INSTALLATION OF ACCESSORIES 42
16. PRINTER MAINTENANCE 45
17. TROUBLESHOOTING 46
18. SPECIFICATIONS 47
19. ACCESSORIES AND CONSUMABLE PARTS 50
20. MS SETTINGS LIST 52

2. SAFETY PRECAUTIONS

In this SAFETY PRECAUTIONS, the following symbols are used to ensure safe and proper use of products and prevent from damaging devices.

WARNING	Failure to follow the instructions marked with this symbol could result in severe personal injury or death.
CAUTION	Failure to follow the instructions marked with this symbol could result in minor personal injury or property damage.

About symbols

The symbol indicates information which you should pay attention to (including danger and warnings).

The symbol indicates information about prohibited procedures.

indicates "Disassembly is prohibited."

The symbol indicates information about obligated or instructed procedures.

indicates "Unplug the power plug from the outlet."

OPERATING PRECAUTIONS

The "products" shall collectively mean the printer, the AC adapter and the AC cable.

⚠WARNING

Never attempt the following. Failure to follow the instructions leads to fire, electric shock, or accident.	
	DO NOT insert any foreign objects such as a piece of metal or any liquid into the products.
	DO NOT touch the terminals of the products, power connector, AC plug, and DC plug. To avoid short circuits, prevent terminals of the products, power connector, AC plug, and DC plug from touching any conductor such as metal.
	Take care not to spill liquid on the products.
	DO NOT touch the products with wet hands.
	DO NOT disassemble or reconstruct the products.
	Use the printer only with the specified AC adapter and specified AC cable.
	DO NOT use the AC adapter at a voltage other than the specified voltage.
	Keep the terminals of the products, power connector, AC plug, and DC plug away from dust and metal objects.
	Make sure the AC plug and DC plug are securely plugged in when using the products.
	DO NOT damage the AC cable, AC plug, and DC plug. DO NOT bend, pull, twist the cable forcibly or place heavy stuff on it.
Be sure to observe the following instructions. Failure to follow the instructions may lead fire, electric shock, or accident.	
	Be sure to use only in countries where the products meet the regulations. Using non-compliant products may endanger the safety of products or be considered against regulations.
	Be sure to hold the plug when unplugging the AC cable from the outlet.

For wireless communication

Observe the following instructions.	
	Always turn off the printer in areas or regions where its use is prohibited, such as in an airplane.
	The printer may affect medical or other electronic devices. Obtain information and data concerning influence due to radio interference from each device manufacturer or dealer.

Procedures to take when in trouble

Follow the instructions in the following cases. Failure to follow the instructions may lead fire, electric shock, or accident.	
	Turn off the printer, and unplug the AC plug from the outlet in any of the following cases: ◆ Abnormal status continues. ◆ The products are giving off an unusual smell, smoke, excessive heat or unusual noise. ◆ A piece of metal, water or other foreign objects get into the products. ◆ The case is broken.
	When the cable of the AC adapter or AC cable is damaged, unplug the AC plug from the outlet. DO NOT use a damaged AC adapter or AC cable.

⚠CAUTION

Observe the following instructions. Failure to follow the instructions may lead fire, electric shock, or accident.	
	Turn off the printer and unplug the AC plug from the outlet when not in use for a long time or before maintenance.
	DO NOT use or store the products in the following locations: ◆ Locations exposed to direct sunlight or high temperature. ◆ Locations exposed to high humidity, a lot of dust, and liquid. ◆ Locations subject to strong vibration, or unstable locations.
	DO NOT cover the products with a cloth when in use.
	NEVER touch the thermal head immediately after printing because it may get hot. Be sure to allow it to cool down before clearing a paper jam or cleaning the head.
	The autocutter printer has an exposed cutter blade in the paper outlet. Do not insert fingers into printer. Avoid touching the exposed blade while the paper cover of the printer is open.
	Keep loose objects such as long hair away from the printer while the printer operates. When they fall into the printer, it may cause personal injury or damage the printer.
	Keep the products away from infants and children.

3. OPERATING PRECAUTIONS

Be careful of the following precautions and use the products properly in order to deliver and maintain the full performance of the products.

■Using Products

Precautions for use environment

- ◆ Be careful not to drop or bump the products on a hard surface.
- ◆ DO NOT install the products in direct sunlight.
- ◆ Be careful about the ambient temperature and humidity.
  Suitable environment for the use of the printer is as follows:
  - Range of the temperature : 5°C to 45°C (41°F to 113°F)
  - Range of the humidity : 10%RH to 90%RH (Non condensing)

  See "18. SPECIFICATIONS" for the guaranteed humidity range at each temperature.
- ◆ DO NOT install the products near devices that generate strong magnetism such as a copy machine motor.
- ◆ DO NOT install the products in a location that is subject to corrosive gas, siloxane and so on.
- ◆ DO NOT connect the AC adapter or AC cable to the same outlet with devices that generate noise.

Precautions on use and operation

- ◆ DO NOT print without the thermal paper.
- ◆ DO NOT use thermal papers taped together.
- ◆ NEVER forcibly pull out the thermal paper by hand with the thermal paper loaded.
- ◆ DO NOT open the paper cover during printing or cutting.
- ◆ DO NOT connect or disconnect the interface cable during printing or communication.
  DO NOT touch the plug of the interface cable during printing.
- ◆ When handling the printer, be aware of static electricity. When the static electricity is discharged, this could cause a USB communication failure.
  When this problem occurs, disconnect the USB plug that is connected to the host device and wait a few seconds before connecting it again.
- ◆ DO NOT use the thermal head when it is wet. Doing so may damage the printer.
- ◆ Printing under low temperature environment or printing at a high print rate might cause unclear printing or generate loud sound. This is not a failure in the printer but an inherent paper phenomenon.
- ◆ When printing at a high print rate for longer length, even non-printing area may be colored due to accumulation of heat in the thermal head.
  Verify the performance with your actual device in advance.
- ◆ Paper feeding may be confused a few dot-line when printing is started or when printing and paper feeding are resumed from a pause state. When printing bit images and so on, always feed the thermal paper for at least 24 dot-line at the start of printing, and print without interrupting.

- Continuous printing and paper feeding should be performed within the following time limit since the paper feed motor heats up causing malfunction.
  - Ambient temperature 35°C (95°F) : 4.4 minutes or less
  - Ambient temperature 45°C (113°F) : 3.5 minutes or less
- The AC adapter may get a little hot when in use. This is normal and not a malfunction.
- Always use the specified thermal paper. See "19. ACCESSORIES AND CONSUMABLE PARTS" for details.
- DO NOT touch the thermal head directly. Doing so may result in poor printing quality due to the dirt or damage by the static electricity.
- NEVER touch the thermal head, paper sensor, or platen roller directly while opening the paper cover to install the thermal paper. Doing so may cause injury or other accidents.
- Be careful not to get your fingers or hands caught in the printer when opening or closing the paper cover.
- The autocutter printer has an exposed cutter blade in the paper outlet. Do not insert fingers into printer.
  Avoid touching the exposed blade while the paper cover of the printer is open.
- In order to ensure the function and the safety of the product, be sure to observe the installation direction.
- The RJ connector should be used as the drawer kick connector.
  DO NOT connect it to a phone line.
- NEVER connect the USB cable or Ethernet cable to the RJ connector.
- DO NOT drop or insert any foreign objects such as clips, pins, and screws in the internal parts or slot of the products.
- DO NOT drop any liquid or spray a solvent to the products.
- NEVER use sharp object such as pen tip to push the switch on the operation panel.
- Make sure not to injure your body or other objects by the plate edge.
- As the plated sheet steel is used in the printer, the edge face might rust.
- When moving the printer from the installation site, hold the printer tightly with both hands, then lift it upward slowly to leave the rubber feet from the installation surface. Lifting it rapidly or moving it horizontally may peel the entire rubber feet, peel their surfaces, or damage the outer case.
- When something goes wrong with the printer during use, stop using it immediately, and unplug the AC plug from the outlet.
- NEVER disassemble the printer without a serviceman.

Precautions for Wireless communication

- When using the Bluetooth interface, the communication may become unstable due to the influence from external radio waves. This is based on Bluetooth specification which is a wireless communication standard.
- The model with Bluetooth operates in the 2.4 GHz frequency range. So if it is used around Wireless LAN (using IEEE802.11b/g/n) or any equipment using the same frequency range such as a microwave oven, radio frequency interference may occur, and the communication may become unstable. When it happens, turn off the interfering equipment or increase the distance. Alternatively, shorten the distance between the host device and the printer as much as possible.

Precautions for maintenance

- ◆ Clean the products' cases using a soft and lint-free cloth. DO NOT use alcohol or other solvent.
- ◆ Before using, clean the terminals using a dry, soft, and lint-free cloth when they are dirty. If the terminals are dirty, it may cause contact failure.
- ◆ When cleaning the thermal head, always wipe it with a cotton swab or other soft material.

Precautions for storing

- ◆ Turn off the printer when not in use.
  In addition, when the printer is not used for a long time, unplug the AC cable from the outlet.
  Moreover, set thermal paper to protect the platen.

■Thermal Paper Handling

- ◆ Store the thermal paper in a cool, dry, and dark place.
- ◆ DO NOT rub the thermal paper with hard objects.
- ◆ DO NOT leave the thermal paper near organic solvents.
- ◆ DO NOT allow PVC film, erasers, or adhesive tape to touch the thermal paper for long periods.
- ◆ DO NOT stack the thermal paper with diazo copies immediately after copying.
- ◆ DO NOT use chemical glue.
- ◆ DO NOT use labeling paper, 2-ply thermal paper, and perforated thermal paper.

■Precautions on Discarding

When discarding used products, discard them according to the disposal regulations and rules of each district.

■Notation

The following 2 types of notation are used throughout this manual to denote operating precautions and items to remember besides the symbols shown in "2. SAFETY PRECAUTIONS":

NOTE

- ◆ Operating Precautions

This box contains items that may lead to a malfunction or deterioration of performance when not followed.

HINT

- Items to Remember

This box contains helpful hints to remember when using the products.

4. PREPARATION

Make sure that the printer and its accessories are contained.
Keep the package and packing materials for future transportation or long-term storage.

Printer

Safety Precautions

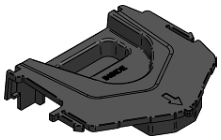

Partition Plate L

Quick Start Guide

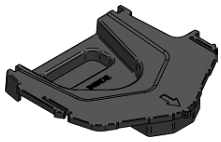

Partition Plate R

Sample Thermal Paper

The available accessories are shown below.
See "18. SPECIFICATIONS" and "19. ACCESSORIES AND CONSUMABLE PARTS", and be sure to purchase our specified products listed on these references.

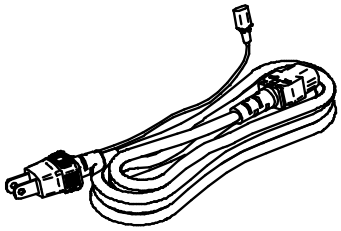

AC Cable (Above figure shows CB-JP07-20A)

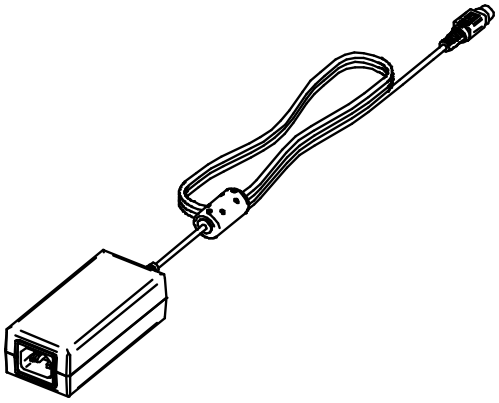

AC Adapter

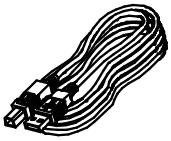

USB Cable

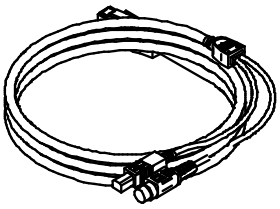

Powered USB Cable

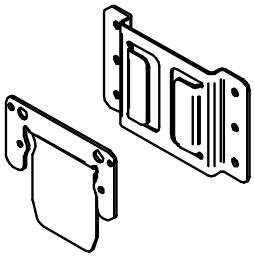

Wall Mounting Kit

5. IDENTIFYING MODEL TYPE

The printer model is identified as follows:

RP-F10-x27J1-x

Series
F: RP-F10 series

Case color
W: White
K: Black

Interface
2: USB + USB host
3: Ethernet + USB host
4: Bluetooth + USB host
5: USB Type-C + Bluetooth + USB host

- ◆ When the printer is incorporated into your equipment and then supplied electric power from the equipment, follow the rated value of input voltage for RP-F10 described in the printer specifications of "18. SPECIFICATIONS".
- ◆ When using a power supply other than the specified AC adapter, use a power supply at your own risk under the safety standard and EMC regulations.

6. EACH PART OF PRINTER

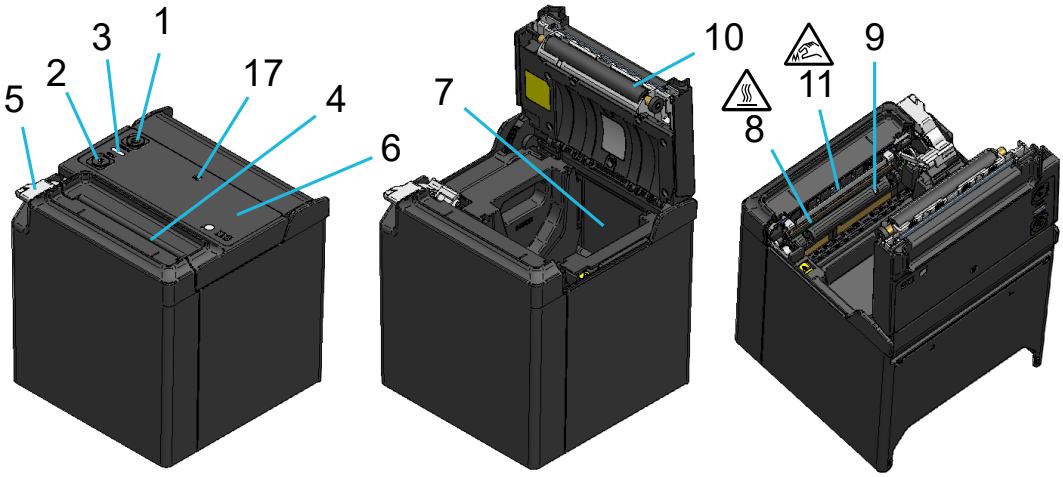

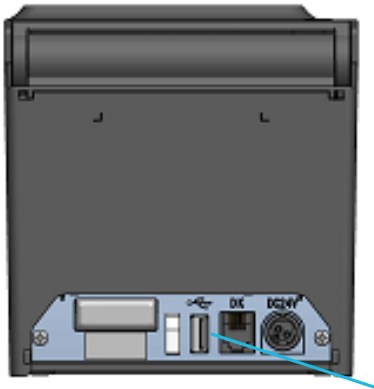

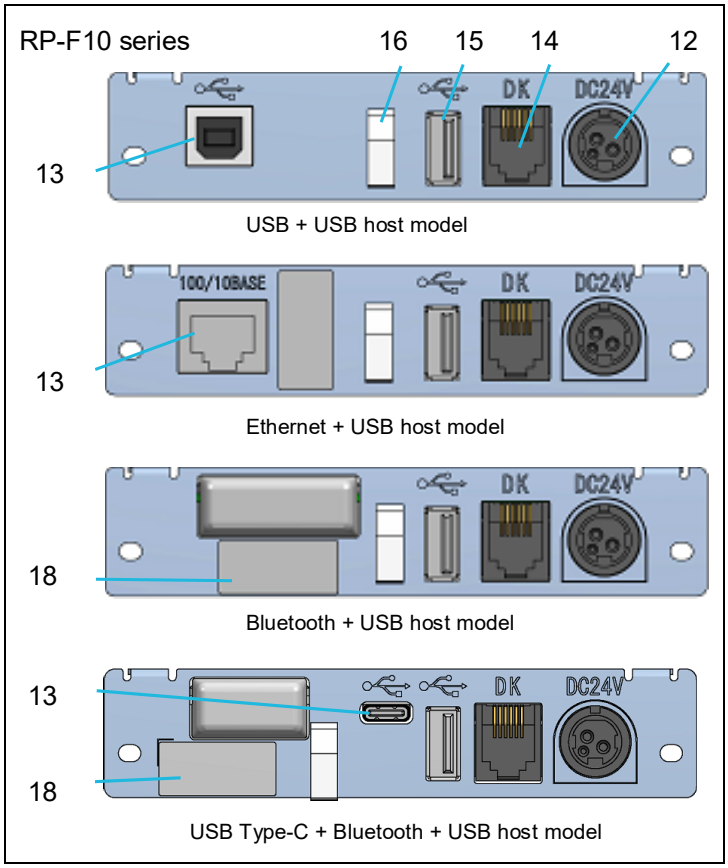

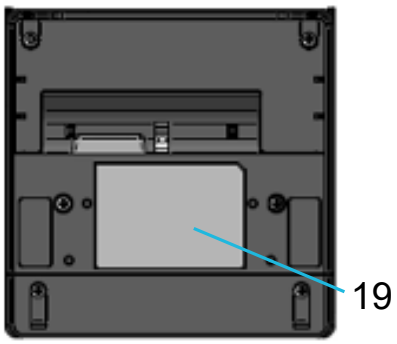

1 POWER Switch

The POWER Switch turns the power on or off. The LED lights when turning on the power. To turn off the power, hold down the switch for longer than 3 second.

2 FEED Switch

The FEED Switch operates paper feed. When holding down the switch for a few seconds, the printer feeds the thermal paper continuously for the period of held.

3 LED

The LED lights when turning on the power. See "LED Indication" on the next page for details.

4 Paper outlet

Thermal paper is ejected from here. The cutter is attached.

5 Release lever

The lever is for opening the paper cover to set the thermal paper. It is also used to open the paper cover when a paper jam occurs.

6 Paper cover

The platen is released from the thermal paper when opening this cover. Open this cover when replacing the thermal paper or cleaning the thermal head.

7 Paper holder

The paper holder holds the thermal paper.

8 Thermal head

The thermal head prints data on the thermal paper. NEVER touch the thermal head with hands immediately after printing because it may get hot.

9 Paper sensor

The sensor detects thermal paper presence.

10 Platen

The platen brings the thermal paper into contact with the thermal head. The platen rotates to feed the paper.

11 Cutter

The cutter cuts the thermal paper automatically after printing. DO NOT touch the exposed blade while the paper cover is open.

12 Power connector

The AC adapter is connected here.

13 Interface connector

The interface cable is connected here.

14 Drawer kick connector

The connector is for connecting the drawer or the external buzzer.
DO NOT connect a phone line, USB cable or Ethernet cable to the connector.

15 USB host connector

The connector (USB Type-A) is for connecting the USB host interface.

16 Wire clip

The communication cable can be fixed to prevent it from being unplugged.

17 N mark (Only for RP-F10-x27J1-4/RP-F10-x27J1-5)

This mark indicates the position of the NFC tag. By bringing an NFC-enabled terminal to this mark closer, it is easy to connect the terminal and the printer.

18 Address label

This label indicates the Bluetooth address or the MAC address for each product.

19 Product label

This label indicates the product name, rated value and serial number.

■LED Indication

Printer Status	LED (Color)*1	LED (Lighting Pattern)
Power off	-	Off
Power on (print-ready)	Blue*2*3	On*2
Printing	Green	On
Waiting for test print	Green	Blink-2
Output buffer full	Green	Blink-1
Out-of-paper error	Lime yellow	Blink-1
Cover open error	Lime yellow	On
Hardware error	Red	On
USB host error	Red	Blink-1*4
USB host (no response) error	Red	Blink-2*4
USB host (hub) error	Red	Blink-3*4
Head temperature error	Purple	On
Voltage error	Purple	Blink-1
Cutter error	Purple	Blink-2
Pairing mode	Blue	Blink-2
Rewriting firmware	White	On

*1: The color tone may vary depending on the individual difference of the products and the viewing angle.
*2: The value at the factory
*3: For USB Type-C + Bluetooth + USB host model (RP-F10-x27J1-5), the LEDs are as follows.
Blue: USB communication is Enable and in iOS/Android connection mode
Green: USB communication is Enable and in Windows connection mode
Aqua: USB communication is Disabled
*4: The indication of printer status returns to the previous indication after 5 seconds.

■LED Blink Pattern

Status	Pattern
Blink-1	
Blink-2	
Blink-3	

■Error and Recovery Procedure

When an error occurs, the printer stops printing operation. However, the data receiving is enabled. The table below shows errors and their recovery procedures.

Error	Detail	Recovery Procedure	Priority*1
Return-waiting	The printer becomes this state after releasing out-of-paper error, cover open error, cutter error or voltage error.	The return-waiting state is released after about 1 second, and the printer becomes print-ready state.	-
Output buffer full	Output buffer of the printer is full.	Read response data from the host device.	1
Out-of-paper error	There is no thermal paper.	Open the paper cover, load thermal paper, and then close the paper cover.	2
Cover open error	The paper cover is open.	Close the paper cover.	3
Cutter error	Cut failure due to paper jam at cutting. ・Cutter work lock error (The cutter blade is stuck protruding out of home position*2.) ・Cutter home lock error (The cutter blade is stuck at home position*2.)	Open the paper cover to remove the error cause and close the paper cover, the printer automatically recovers. If the paper cover is not open or the printer does not automatically recover, see "Clearing Cutter Error" in "9. PREVENTION AND TREATMENT OF PAPER JAM".	4
Voltage error	The power voltage is out of the allowable range.	The printer automatically recovers when the voltage is returned to the allowable range.	5
Head temperature error	Head temperature rises to about 85°C (185°F) or higher.	The printer automatically recovers when head temperature becomes about 80°C (176°F) or lower.	6
USB host error USB host (no response) error USB host (hub) error	The USB host interface is in abnormal condition.*3	Reconnect peripherals after releasing the abnormal condition.	7
Hardware error	An abnormality occurs in the thermal head or the circuit board.	Recovery is not possible. Request for repair.	8

*1: This indicates the priority when multiple errors occur simultaneously. The bigger number indicates higher priority.
For example, when "Cover open error" and "Out-of-paper error" occur simultaneously, the LED shows "Cover open error" which has the higher priority.

*2: The cutter blade operates starting from the home position (the blade is stored).

*3: The abnormal condition indicates mainly the following conditions.
・Connected unsupported peripherals.
・Detected overcurrent.
・Connected peripherals more than 3 through by the USB hub.
・Connected the same type of peripherals more than 2 through by the USB hub.
・No response from the peripheral device.
・The USB hub is cascade-connected with more than 2 levels.
・Connected the USB hub to the Type-C port.

7. POWER CONNECTION

To supply power to the printer, use the AC adapter.
Be sure to see "18. SPECIFICATIONS" for the AC adapter.
The AC adapter and the AC cable are optional accessories. See "18. SPECIFICATIONS" and "19. ACCESSORIES AND CONSUMABLE PARTS", and be sure to purchase our specified products listed on these references.

■Connecting AC Adapter

(1) Connect the AC cable to the AC adapter.

(2) Plug the DC plug of the AC adapter to the power connector of the printer.

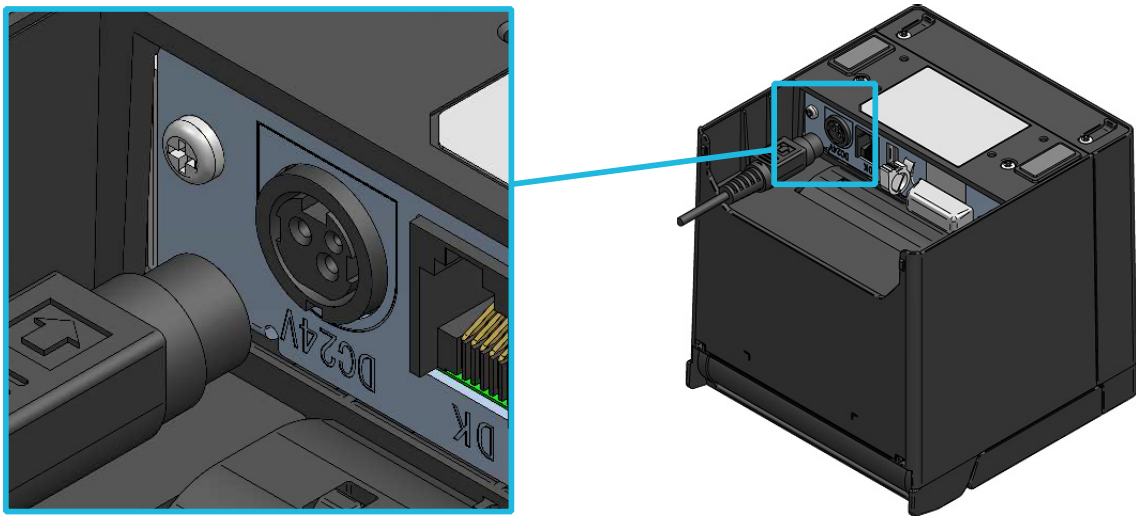

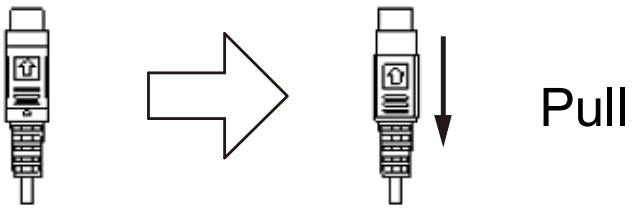

How to unlock the DC plug

(3) Plug the AC plug of the AC cable to an outlet.

NOTE

- Plug the DC plug into the power connector of the printer in the correct orientation. When plug the DC plug forcibly in wrong orientation, it may cause damage.
- Unplug the AC plug of the AC cable from the outlet when inserting or pulling out the DC plug.
- The printer power connector has the locking system.
  Pull the DC plug to the opposite direction of the arrow shown in the front side of the DC plug to unlock.
  Unlock the DC plug as shown in the figure before disconnecting it.
- When the printer is not used for a long time, unplug the AC plug of the AC cable from the outlet.

8. LOADING THERMAL PAPER

The printer uses the thermal paper roll (hereinafter referred to as thermal paper).
Use the thermal paper with printing surface rolled outwards.
The function settings of the printer differ depending on the thermal paper. See "11. FUNCTION SETTINGS" for details.

■Loading Thermal Paper

(1) Operate the release lever in the direction of the arrow shown in Figure 8-1 and Figure 8-2 to open the paper cover.

Paper ejection (Top)

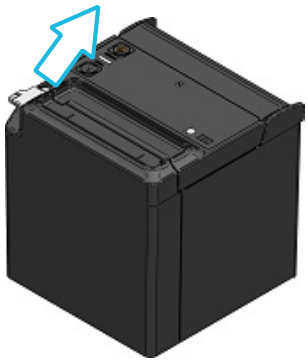

Figure 8-1 Release Lever (Top)

Paper ejection (Front)

Figure 8-2 Release Lever (Front)

(2) Take the glued end from the thermal paper.

(3) Load the thermal paper into the paper holder. At the time, load the thermal paper direction as shown in Figure 8-3 and Figure 8-4.

Paper ejection (Top)

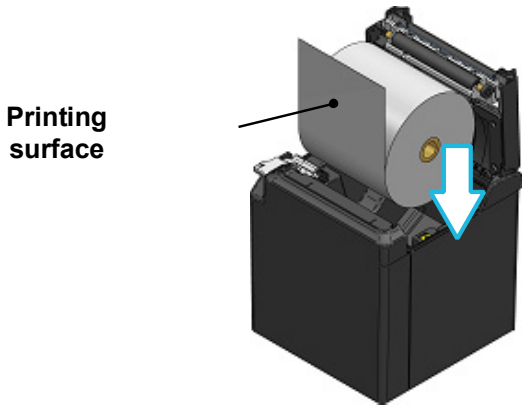

Figure 8-3 Thermal Paper Setting Direction (Top)

Paper ejection (Front)

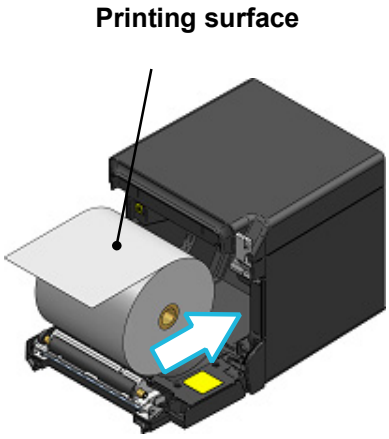

Figure 8-4 Thermal Paper Setting Direction (Front)

NOTE

◆ DO NOT touch the cutter blade directly.

(4) Pull the thermal paper straight. Make sure that the thermal paper does not slant.

Paper ejection (Top)

【Correct】

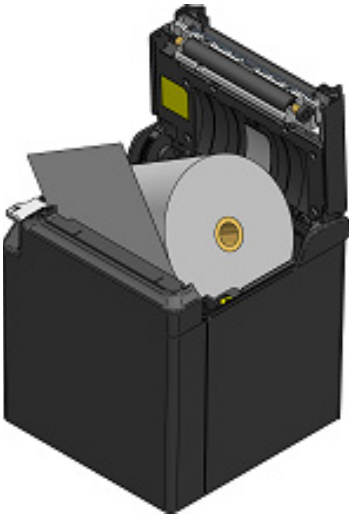

【Incorrect】

Figure 8-5 Thermal Paper Setting State (Top)

Paper ejection (Front)

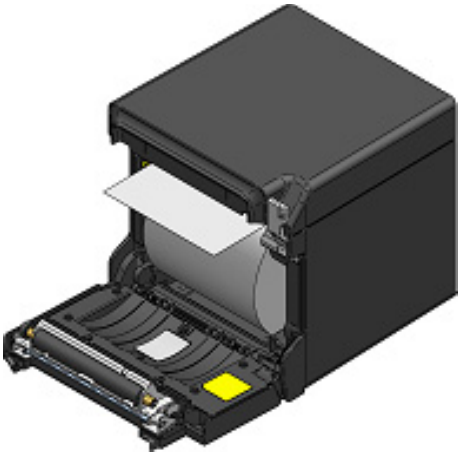

【Correct】

【Incorrect】

Figure 8-6 Thermal Paper Setting State (Front)

(5) Push firmly the part indicated by the arrow in Figure 8-7 and Figure 8-8 to close the paper cover to avoid one side lock defect.
After closing the paper cover, paper feed and paper cutting are performed automatically.

Paper ejection (Top)

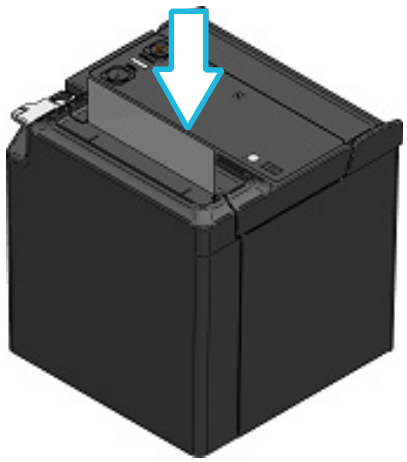

Figure 8-7 Paper Cover (Top)

Paper ejection (Front)

Figure 8-8 Paper Cover (Front)

NOTE

- Pull the thermal paper straight.
- Push the paper cover firmly to close and avoid one side lock defect.
- Be sure to operate the release lever to the end. If not, the paper cover may not open.
- DO NOT cover the paper outlet or hold down the thermal paper ejected. Doing so may cause a paper jam.
- DO NOT touch the gear of the platen and/or the gear of the printer. Doing so may cause loss of printing quality or damage.

HINT

- Leaving the printer with the thermal paper for a long time may cause a paper feeding problem because the surface of the thermal paper sticks to the thermal head due to the environmental changes. In that case, open the paper cover to separate the thermal paper from the thermal head, and then close the paper cover before use.

■Thermal Paper Shape

Always use the specified thermal paper. See "19. ACCESSORIES AND CONSUMABLE PARTS" for details.

NOTE

- ◆ DO NOT use the thermal paper whose end is glued, taped or folded.
- ◆ Use the thermal paper whose core inside diameter is 12 mm or more and whose outside diameter is 18 mm or more.

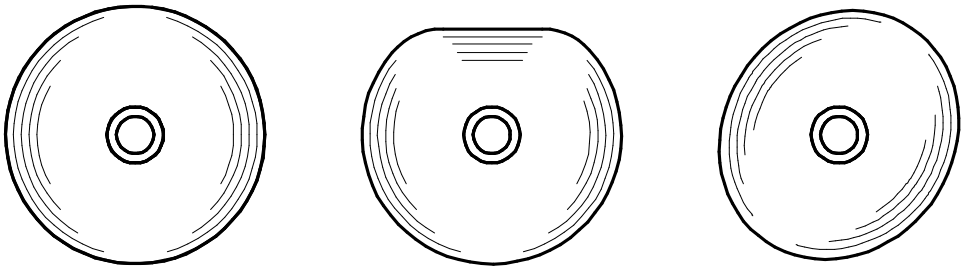

CORRECT **INCORRECT** **CORRECT**

NOTE

- ◆ DO NOT use deformed thermal paper. Doing so may cause the printer damaged.

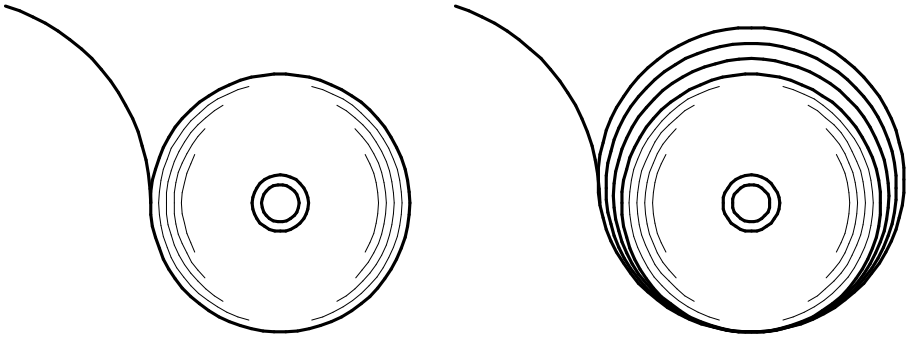

CORRECT **INCORRECT**

NOTE

- ◆ In the case of using loosened thermal paper roll, rewind the roll before using it.

9. PREVENTION AND TREATMENT OF PAPER JAM

DO NOT touch the thermal paper while the paper is being ejected or before it is cut. Covering the paper outlet or pulling out the thermal paper when ejecting may cause a paper jam, cut failure, or line feed failure. NEVER open the paper cover during paper cutting.

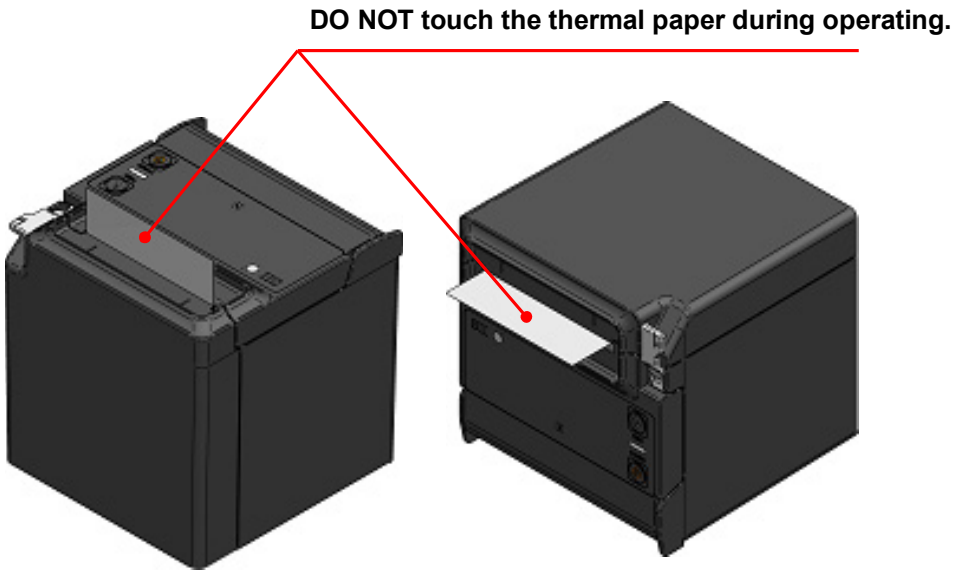

■Clearing Paper Jam

When a paper jam occurs, remove the thermal paper according to the following procedure.

(1) Turn off the printer.

(2) Operate the release lever to open the paper cover, and remove the jammed paper.

NOTE

◆ Do not damage the printer when removing the thermal paper.
Especially, do not touch the thermal head because it is easy to break.

(3) Load the thermal paper straight and then close the paper cover gently.

(4) Turn on the printer.

(5) When the printer is recovered normally, the LED turns blue.

NOTE

◆ DO NOT touch the thermal head immediately after printing because it may get hot.

■Clearing Cutter Error

When the cutter is locked during paper cutting due to a cutter error and the paper cover does not open, recover the printer according to the following procedure.

(1) Turn off the printer.

NOTE

◆ Be sure to turn off the printer before clearing a cutter error.

(2) By operating the release lever repeatedly to the end while holding the paper cover, the cutter blade returns to the home position. And then, the paper cover can be open. When a paper jam occurs, remove it.

(3) Set the thermal paper straight and then close the paper cover gently.

(4) Turn on the printer.

(5) When the printer is recovered normally, the LED turns blue.

NOTE

◆ DO NOT use such as ballpoint pens, drivers, and cutter knives to remove a jammed paper. Be careful not to damage the printer.
Especially, do not touch the thermal head because it is easy to break.

◆ Be careful not to cut your fingers or be injured by the cutter blade.

◆ DO NOT apply excessive force on the cutter blade.

10. TEST PRINT

The printer can perform a test print.
In the test print, such as the firmware version and setting values of function settings are printed.

(1) Install the thermal paper in the printer as instructed in "8. LOADING THERMAL PAPER". Ensure that no error occurs, and then turn off the printer.

(2) Hold the FEED Switch down and press the POWER Switch, then release the POWER Switch. Release the FEED Switch when the test print has been started.

(3) The printer cuts the paper and returns to the print-ready status when the test print has completed.

```
RP series Interface
RP-F10 [ Ver X.XX ]
  DD.MMM.YYYY
Copyright(C):SII

* MS1 *
4-5)Standby LED:Blue
7)  Auto Activation by AC:Enable
8)  Power SW:Enable

* MS2 *
1-2)Buzzer Count:None
3-4)Buzzer Pattern:Pattern1
5)  Buzzer Volume:Loud

* MS3 *
1-2)Buzzer Count:None
3-4)Buzzer Pattern:Pattern1
5)  Buzzer Volume:Loud

* MS4 *
1-2)Division Method:288[dots]
3)  Head Drive:Dynamic
4)  Paper Width:80[mm]
5)  Effective Dots:576[dots]
7-8)Print Speed:High

* MS5 *
1)  Auto Status Back:Enable
2)  Init. Response:Enable
3)  Error Through:Enable
4)  Response Data Discarding:Disable
6-7)Paper Set Handle:Standard
8)  Cutting Method:Full

* MS6 *
1-8)Print Density:100[%]

* MS7 *
1-8)Thermal Paper:Standard

* MS13 *
1)  Kanji Code:JIS Code
2)  Reverse Function:Disable
3)  Realtime Command:Enable

* MS17 *
1-2)Paper Saving:Disable
3)  Backfeed After Cut:Disable

* MS18 *
1-2)Buzzer Count:None
3-4)Buzzer Pattern:Pattern1
5)  Buzzer Volume:Loud

* MS38 *
1)  Scanner Auto Status Back:Disable

* Communication Type *
 USB Communication
 Control Model:RP-F10
 USB Device Class:Printer

* Font Information *
 Character Code Table:Code Page437
 International Character:USA

* Serial Number Information *
 XXXXXXXXXX
```

Figure 10-1 Sample Test Print (USB + USB Host Model)

```
RP series Interface
RP-F10 [ Ver X.XX ]
  DD.MMM.YYYY
Copyright(C):SII

* WS1 *
4-5)Standby LED:Blue
7)  Auto Activation by AC:Enable
8)  Power SW:Enable

* WS2 *
1-2)Buzzer Count:None
3-4)Buzzer Pattern:Pattern1
5)  Buzzer Volume:Loud

* WS3 *
1-2)Buzzer Count:None
3-4)Buzzer Pattern:Pattern1
5)  Buzzer Volume:Loud

* WS4 *
1-2)Division Method:288[dots]
3)  Head Drive:Dynamic
4)  Paper Width:80[mm]
5)  Effective Dots:576[dots]
7-8)Print Speed:High

* WS5 *
1)  Auto Status Back:Enable
2)  Init. Response:Enable
3)  Error Through:Enable
4)  Response Data Discarding:Disable
6-7)Paper Set Handle:Standard
8)  Cutting Method:Full

* WS6 *
1-8)Print Density:100[%]

* WS7 *
1-8)Thermal Paper:Standard

* WS13 *
1)  Kanji Code:JIS Code
2)  Reverse Function:Disable
3)  Realtime Command:Enable

* WS17 *
1-2)Paper Saving:Disable
3)  Backfeed After Cut:Disable

* WS18 *
1-2)Buzzer Count:None
3-4)Buzzer Pattern:Pattern1
5)  Buzzer Volume:Loud

* WS38 *
1)  Scanner Auto Status Back:Disable

* Communication Type *
 LAN Communication
 MAC Address:     XX:XX:XX:XX:XX:XX
 IP Address:      192.168.0.190
 Subnet Mask:     255.255.255.0
 GateWay Address: 0.0.0.0
 DHCP Client:     Enable
 Physical Layer:  Auto Nego
* Font Information *
 Character Code Table:Code Page437
 International Character:USA

* Serial Number Information *
 XXXXXXXXXX
```

Figure 10-2 Sample Test Print (Ethernet + USB Host Model)

Table 10-1
Ethernet Information

Item	Description
MAC Address	MAC Address
IP Address	IP Address
Subnet Mask	Subnet Mask
GateWay Address	Gateway Address
DHCP Client	Selected DHCP Client Mode
Physical Layer	Selected Communication Speed and Communication Mode

```
RP series Interface
RP-F10 [ Ver X.XX ]
  DD.MMM.YYYY
Copyright(C):SII

* WS1 *
4-5)Standby LED:Blue
7)  Auto Activation by AC:Enable
8)  Power SW:Enable

* WS2 *
1-2)Buzzer Count:None
3-4)Buzzer Pattern:Pattern1
5)  Buzzer Volume:Loud

* WS3 *
1-2)Buzzer Count:None
3-4)Buzzer Pattern:Pattern1
5)  Buzzer Volume:Loud

* WS4 *
1-2)Division Method:288[dots]
3)  Head Drive:Dynamic
4)  Paper Width:80[mm]
5)  Effective Dots:576[dots]
7-8)Print Speed:High

* WS5 *
1)  Auto Status Back:Enable
2)  Init. Response:Enable
3)  Error Through:Enable
4)  Response Data Discarding:Disable
6-7)Paper Set Handle:Standard
8)  Cutting Method:Full

* WS6 *
1-8)Print Density:100[%]

* WS7 *
1-8)Thermal Paper:Standard

* WS13 *
1)  Kanji Code:JIS Code
2)  Reverse Function:Disable
3)  Realtime Command:Enable

* WS17 *
1-2)Paper Saving:Disable
3)  Backfeed After Cut:Disable

* WS18 *
1-2)Buzzer Count:None
3-4)Buzzer Pattern:Pattern1
5)  Buzzer Volume:Loud

* WS38 *
1)  Scanner Auto Status Back:Disable

* WS39 *
1)  Auto Connection:Enable
2)  Security Mode:SSP
3)  Inquiry Response:Pairing Mode
4)  AssocModel:Just Works

* Communication Type *
 Bluetooth Communication
 Printer Name : RP-F10
 Address      : XX:XX:XX:XX:XX:XX

* Font Information *
 Character Code Table:Code Page437
 International Character:USA

* Serial Number Information *
 XXXXXXXXXX
```

Figure 10-3 Sample Test Print (Bluetooth + USB Host Model)

Table 10-2
Bluetooth Information

Item	Description
Auto Connection	Selected iOS Auto Connection
Security Mode	Selected Security Mode
Inquiry Response	Selected Inquiry Response
AssocModel	Selected Association Model
Printer Name	Printer Name
Address	Bluetooth Address

```
RP series Interface
RP-F10 [ Ver X.XX ]
  DD.MMM.YYYY
Copyright(C):SII

* MS1 *
4-5)Standby LED:Blue
7)  Auto Activation by AC:Enable
8)  Power SW:Enable

* MS2 *
1-2)Buzzer Count:None
3-4)Buzzer Pattern:Pattern1
5)  Buzzer Volume:Loud

* MS3 *
1-2)Buzzer Count:None
3-4)Buzzer Pattern:Pattern1
5)  Buzzer Volume:Loud

* MS4 *
1-2)Division Method:288[dots]
3)  Head Drive:Dynamic
4)  Paper Width:80[mm]
5)  Effective Dots:576[dots]
7-8)Print Speed:High

* MS5 *
1)  Auto Status Back:Enable
2)  Init. Response:Enable
3)  Error Through:Enable
4)  Response Data Discarding:Disable
6-7)Paper Set Handle:Standard
8)  Cutting Method:Full

* MS6 *
1-8)Print Density:100[%]

* MS7 *
1-8)Thermal Paper:Standard

* MS13 *
1)  Kanji Code:JIS Code
2)  Reverse Function:Disable
3)  Realtime Command:Enable

* MS17 *
1-2)Paper Saving:Disable
3)  Backfeed After Cut:Disable

* MS18 *
1-2)Buzzer Count:None
3-4)Buzzer Pattern:Pattern1
5)  Buzzer Volume:Loud

* MS38 *
1)  Scanner Auto Status Back:Disable

* MS39 *
1)  Auto Connection:Enable
2)  Security Mode:SSP
3)  Inquiry Response:Pairing Mode
4)  AssocModel:Just Works

* Communication Type *
 USB Communication
 Control Model:RP-F10
 USB Device Class:Printer
 USB Communication:Enable
 Connection Mode:iOS/Android

 Bluetooth Communication
 Address      : XX:XX:XX:XX:XX:XX

 Printer Name : RP-F10

* Font Information *
 Character Code Table:Code Page437
 International Character:USA

* Serial Number Information *
 XXXXXXXXXX
```

Figure 10-4 Sample Test Print (USB Type-C + Bluetooth + USB Host Model)

Table 10-3
USB Type-C + Bluetooth Information

Item	Description
USB Device Class	Selected USB Class
USB Communication	Selected USB communication Enable/Disable
Connection Mode	Selected USB connection mode
Address	Bluetooth address
Printer Name	Printer Name

11. FUNCTION SETTINGS

This printer can set various functions according to use conditions and intended use.
The setting contents are stored in the Memory Switch (hereinafter referred to as MS) in the FLASH memory mounted in the printer, and it is possible to set MS by using the switches, software, or inputting command.
This section describes the setting procedure by using the switches.
See "20. MS SETTINGS LIST" for the MS setting list.

HINT

- The memory switch can also be set from software. Download software from the download page listed on the rear cover.
  The following software can be set.
  - ・For Windows: "SII Printer Setting Utility" included in "SII POS Printer Software for Windows"
  - ・For iOS and Android: App "SII Printer Utility" provided by App Store or Google Play

■Procedure for Setting Functions Using Switches

To set the functions using the switches, set the printer in the Setting Mode.
To enter the Setting Mode, follow the procedure below.

(1) Load the thermal paper in the printer as instructed in "8. LOADING THERMAL PAPER".
Ensure that no error occurs, and then turn off the printer.
See "6. EACH PART OF PRINTER" for the error status.

(2) Hold the FEED Switch down and press the POWER Switch, then release the POWER Switch.
Keep pressing the FEED Switch until the test print is completed.

(3) A message of mode selection is printed as shown in Figure 11-1 when the test print has completed.
To enter the Setting Mode, press the FEED Switch.

```
[Enter Setting Mode]
Enter Setting Mode: Feed SW
Exit: Power SW
```

Figure 11-1 Mode Selection Message

(4) A message for selecting MS to be set is printed as shown in Figure 11-2 when the printer enters the Setting Mode.
Press the FEED Switch the number of times corresponding to the selected MS number, and then press the POWER Switch.

```
[MS Selection]
0 : Exit
1 : MS1
2 : MS2
3 : MS3
4 : MS4
5 : MS5
6 : MS6
7 : MS7
8 : MS13
9 : MS17
10: MS18
11: I/F Setting
12: International Character
13: Character Code Table
14:  Default Setting
Press the FEED switch an equal
number of times to the selected number.
After that, press the POWER SW.
```

・For “11: I/F Setting”, the items to be set are different for each model.
・When pressing the FEED Switch once, "1 : MS1" is selected.
・When pressing the POWER Switch without pressing the FEED Switch, "0 : Exit" is selected.

Figure 11-2 MS Selection Message

(5) A message for selecting the function assigned to the selected MS is printed as a sample shown in Figure 11-3.
Press the FEED Switch the number of times corresponding to the selected function number, and then press the POWER Switch.

```
[Function selection of MS1]
0 : Return to MS selection
1 : Standby LED
2 : Auto Activation by AC
3 : Power SW
Press the FEED switch an equal
number of times to the selected number.
After that, press the POWER SW.
```

・When pressing the FEED Switch once, "1 : Standby LED" is selected.
・When pressing the POWER Switch without pressing the FEED Switch, "0 : Return to MS Selection" is selected.

Figure 11-3 Function Selection Message (Example: Selected MS1)

(6) A message for selecting the setting value of the selected function is printed as a sample shown in Figure 11-4.
Press the FEED Switch the number of times corresponding to the selected setting value number, and then press the POWER Switch.

```
[Standby LED]
0 : Return to function selection
1 : Aqua
2 : Green
3 : Off
4 : Blue
Press the FEED switch an equal
number of times to the selected number.
After that, press the POWER SW.
```

・When pressing the FEED Switch twice, "2 : Green" is selected.

Figure 11-4 Setting Value Selection Message (Example: Selected Standby LED)

(7) A message for confirming the selected setting value is printed as a sample shown in Figure 11-5.

```
[Standby LED]
Set Green
Save setting    : Feed SW
Discard setting : Power SW
```

Figure 11-5 Setting Value Confirmation Message (Example: Selected Green)

Press the FEED Switch to save the setting value to the memory. Figure 11-2 is printed.

Press the POWER Switch to discard the selected item. A message of the function selection is printed as a sample shown in Figure 11-3. If select "0 : Return to MS Selection" there, function selection is not performed, and Figure 11-2 is printed.

To continue to set functions, return to (4).

(8) To exit the Setting Mode, select "0 : Exit" in Figure 11-2.
The test print and Figure 11-1 printing start again. Verify that the functions are properly set.

12. CONNECTING TO HOST DEVICE

The printer supports the USB interface, the Ethernet interface and the Bluetooth interface.
The available interface varies depending on the model, order the model of interface method to use from the following.

Model	Interface	Product Name
USB + USB host model	USB interface	RP-F10-x27J1-2
Ethernet + USB host model	Ethernet interface	RP-F10-x27J1-3
Bluetooth + USB host model	Bluetooth interface	RP-F10-x27J1-4
USB Type-C + Bluetooth + USB host model	USB interface Bluetooth interface	RP-F10-x27J1-5

Each interface cables are required separately for communication with the USB interface or Ethernet interface. See "18. SPECIFICATIONS" for details of interface specifications.
The communication speed may be decreased depending on processing by software or print contents.

■USB Interface / Ethernet Interface

(1) Ensure that the printer is off.

(2) Connect the interface cable to use to the interface connector on the back side of the printer. (Bind the USB cable with the wire clip as shown in Figure 12-2 for connecting the USB cable and Figure 12-4 for connecting the USB Type-C cable.)

(3) Turn on the printer, and send data from the host device to the printer.

(4) Verify that the data is printed correctly.

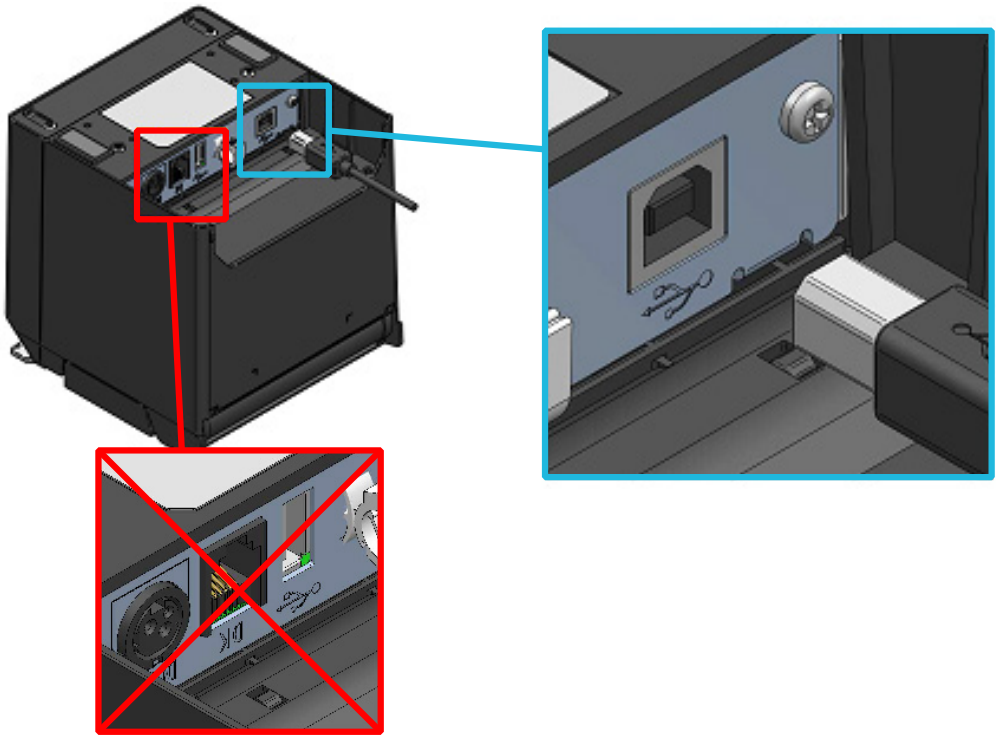

Figure 12-1 Printer and USB Cable Connection

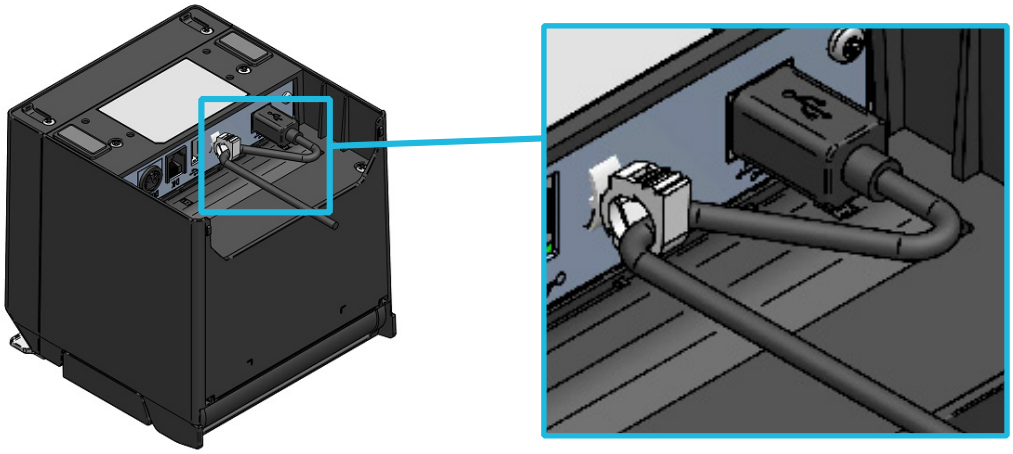

Figure 12-2 Printer and USB Cable Bind

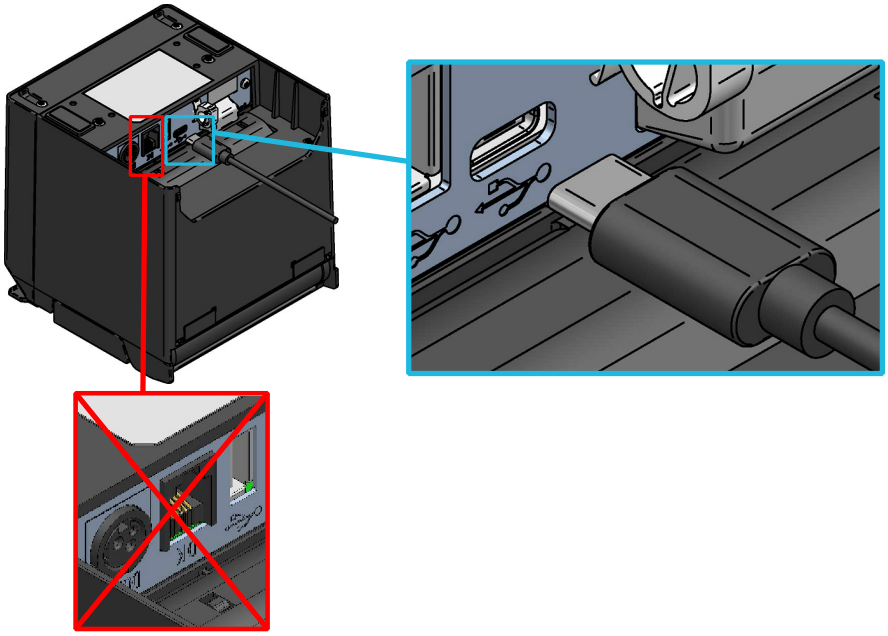

Figure 12-3 Printer and USB Type-C Cable Connection

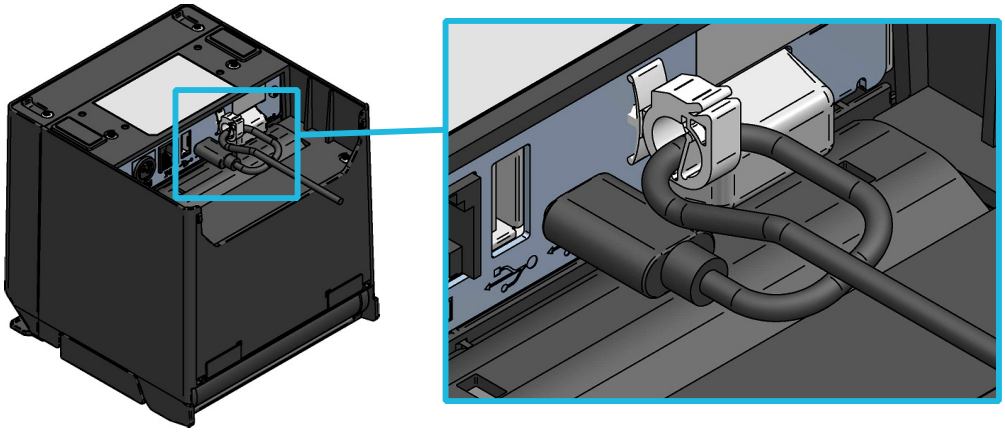

Figure 12-4 Printer and USB Type-C Cable Bind

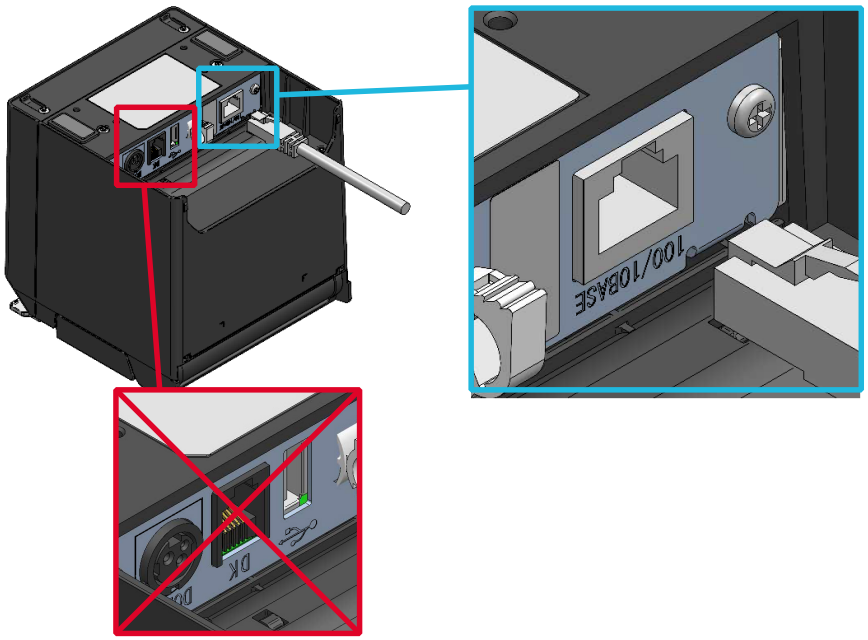

Figure 12-5 Printer and Ethernet Cable Connection

NOTE

- When connecting each interface cable to the interface connector, push the plug to the end.
- NEVER connect a USB cable, a USB Type-C cable or an Ethernet cable to the drawer kick connector.
- NEVER connect plugs of other interface cables including a modular cable or a phone line to the interface connector.
- When connecting an outdoor aerial-wired LAN cable, be sure to use it through another anti-serge device. Otherwise, the device may be damaged by induced lightning.
- For USB communication by USB Type-C + Bluetooth + USB host model, USB Power Delivery is necessary to have been mounted on the host device. Ask your SII sales representative about connectable models.

■Bluetooth Interface

(1) Turn on the printer and pair it with the host device.
In addition, by using the NFC (Near Field Communication Technology) tag built in the printer, automatic pairing between an NFC-enabled Android terminal and a printer is possible.

NOTE

- ◆ Application for inter-device communication needs to be added to the Android terminal separately.

(2) In the factory shipment state, the printer enters pairing mode for about 60 seconds by pushing the POWER Switch for 7 seconds or more with the printer off state. During the pairing mode, the LED blinks twice per second. During this time, pair the printer with the host device.
Pairing is conducted by SSP (Simple Secure Pairing), however, PIN code is used when the host device does not support SSP.
The PIN code is "0000" at the factory.

(3) Conduct Bluetooth connection with the host device.

(4) Check the communication status on the host device.

(5) Send data from the host device, and verify that the data is printed correctly.

USB Type-C + Bluetooth + USB host model

"USB Type-C + Bluetooth + USB host model (RP-F10-x27J1-5)" gives priority to USB communication (at the factory) while the interface connector (USB Type-C) is connected by USB.
Set the USB communication to disable to use Bluetooth while charging the device with the USB port for such as power supply to the host device.
To switch the USB communication Enable/Disable, push the POWER Switch 3 times within 3 seconds when the printer state is "power on (print-ready)".
Do not switch the USB communication during "printing".
The printer status can be confirmed at the LED indication.

Blue: USB communication is Enable and in iOS/Android connection mode
Green: USB communication is Enable and in Windows connection mode
Aqua: USB communication is Disabled

See "LED Indication" in "6. EACH PART OF PRINTER" for details.

⚠WARNING

- ◆ The printer may affect medical or other electronic devices. Obtain information and data concerning influence due to radio interference from the respective manufacturers or dealers.
- ◆ When using the printer in medical institutions, follow their guidelines.
- ◆ DO NOT use the printer in areas or zones where its use is prohibited.

HINT

- The distance of communication is approximately 10 m. However, the distance may differ depending on the radio interference and environment.
- For Android terminal, pairing is possible using NFC or QR Code.
  In that case, the Android app provided by us is required.
  Download the Android app "SII Printer Utility" from Google Play, and install it on a host device.
  Refer to the following for the pairing procedure when using the "SII Printer Utility".
- Pairing procedure using NFC
  Set the Bluetooth function and NFC function of host device to on, and start the "SII Printer Utility".
  In the "Selected device" field, tap [Device not selected] or the device to be selected.
  Tap "NFC search" in the "Device Search" field.
  Turn on the printer, and bring the NFC antenna of host device closer to the position of N mark on the printer.
  Pairing is started.
- Pairing procedure using QR Code
  Set the Bluetooth function of host device to on, and start the "SII Printer Utility".
  In the "Selected device" field, tap [Device not selected] or the device to be selected.
  Tap "QRCODE search" in the "Device Search" field.
  Perform the test print. For the method of test print, see "10. TEST PRINT".
  Read the QR Code printed on the test print with the camera of host device.
  Pairing is started.

13. CONNECTING TO PERIPHERALS

This printer can be used by connecting the peripherals (specified peripherals and recommended products) shown in Table 13-1 to the specified connectors.
See "19. ACCESSORIES AND CONSUMABLE PARTS" for details of the specified peripherals and the recommended products.

Table 13-1 Connectable Peripherals

Specified Connecter (Interface)	Peripherals
Drawer kick connector*	Drawer
	External buzzer
USB host connector (USB host interface)	Customer display
	Barcode scanner
	USB hub

*: The drawer kick connector cannot be used by concurrent connections to multiple peripherals.

■Drawer Connection

(1) Ensure that the printer is off.

(2) Plug the modular cable to the drawer kick connector on the back side of the printer.

(3) Turn on the printer.

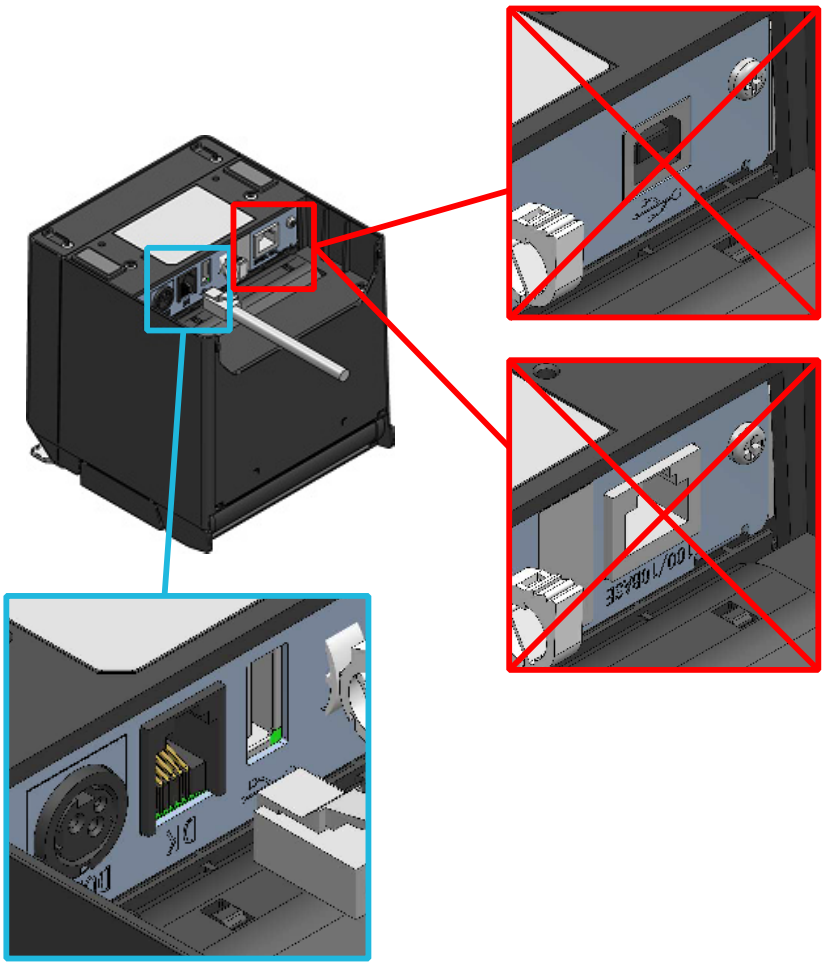

Figure 13-1 Printer and Modular Cable Connection

NOTE

- When connecting or disconnecting the modular cable, hold the plug. Never pull the cable.
- NEVER connect the modular cable to other interface connector including USB interface or Ethernet interface.
- NEVER connect plugs including other interface cables or phone line to the drawer kick connector.
- NEVER use a modular cable more than 3 m.

■External Buzzer Connection

(1) Ensure that the printer is off.

(2) Plug one plug of the modular cable to the connector of external buzzer.

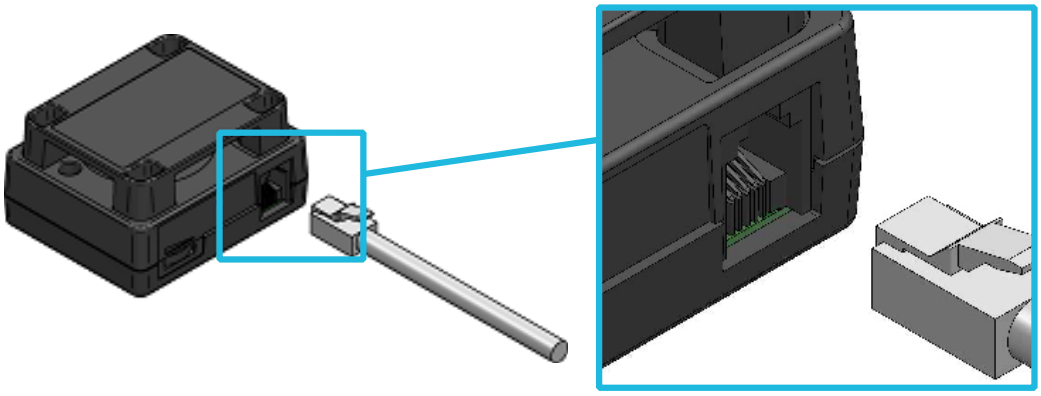

Figure 13-2 External Buzzer and Modular Cable Connection

(3) Plug the other side plug of the modular cable to the drawer kick connector on the back side of the printer.

(4) Peel off the one release paper of the double-sided tape, and paste it on the bottom of the external buzzer.

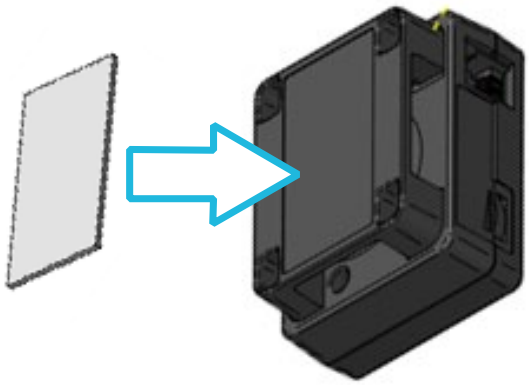

Figure 13-3 Pasting Double-sided Tape to External Buzzer

(5) Peel off the other release paper of the double-sided tape pasted on the buzzer, and paste the external buzzer to the installing position of the printer.

(6) Turn on the printer.

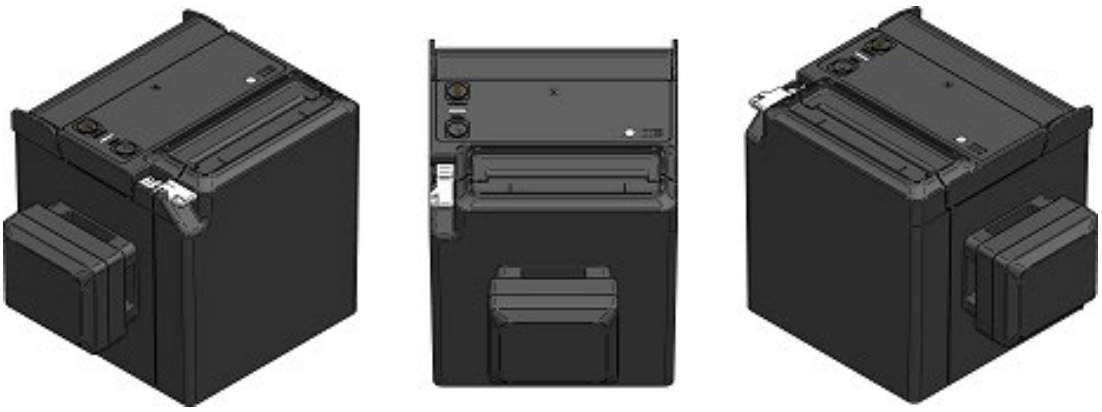

Figure 13-4 External Buzzer Installing Position Example (Ejection: Top)

Figure 13-5 External Buzzer Installing Position Example (Ejection: Front)

NOTE

- Before pasting the double-sided tape, wipe with like a dirt-free cloth so that there is no dirt or foreign matter on the pasting position.
- NEVER use a modular cable more than 3 m.

■USB Host Interface Connection

The patterns of the peripherals being connectable to the USB host interface are shown in Table 13-2.

Table 13-2　USB Host Interface Connection Pattern

Connection Pattern	Connection Image
Customer display connection	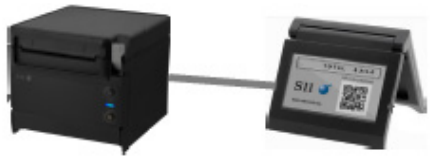
Barcode scanner connection	
The concurrent connection from the customer display and the barcode scanner.*	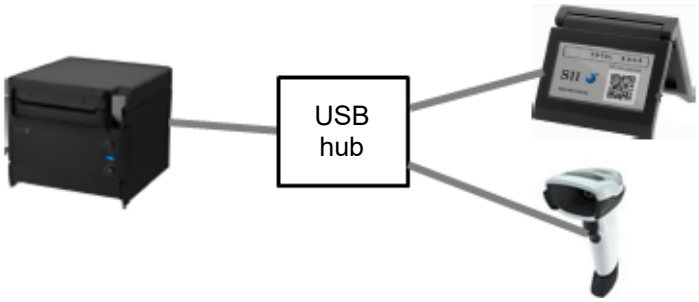

*: The maximum number of concurrent connections via the USB hub is one for each customer display and the barcode scanner: a total of 2. Do not connect more than the maximum number.

(1) Ensure that the printer is off.

(2) Connect the plug of USB host interface cable to the USB host connector on the back side of the printer.
Bind the cable with the wire clip as shown in Figure 13-7. For USB Type-C + Bluetooth + USB host model, bind both 2 cables as shown in Figure 13-8.

(3) Turn on the printer.

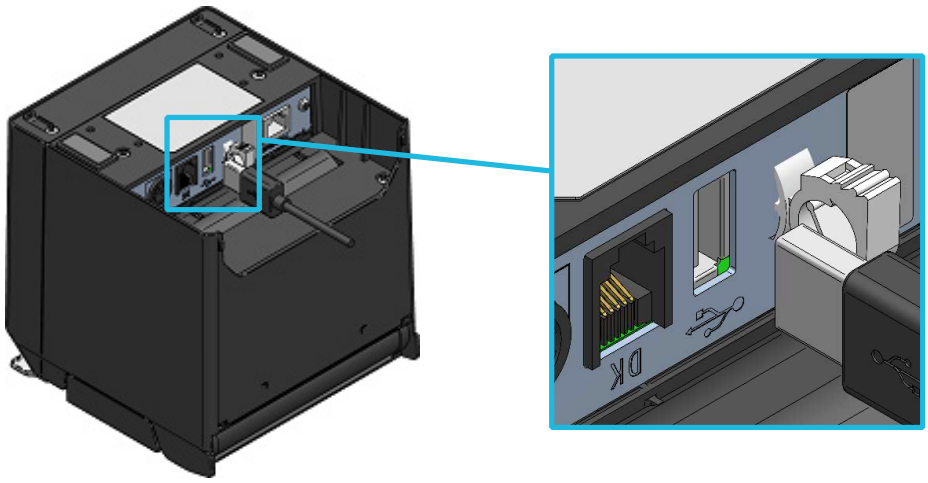

Figure 13-6　Printer and USB Cable (USB Host) Connection

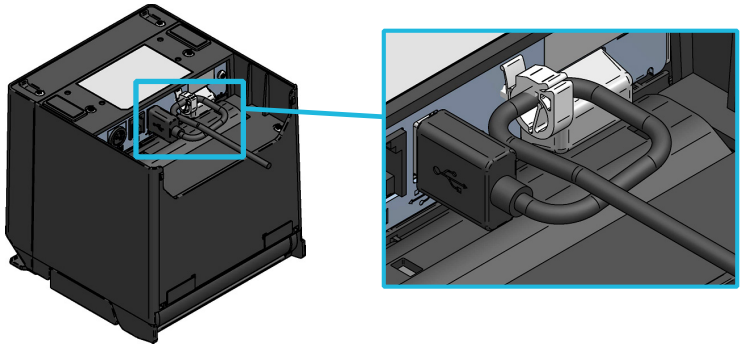

Figure 13-7　Printer and USB Cable (USB Host) Bind

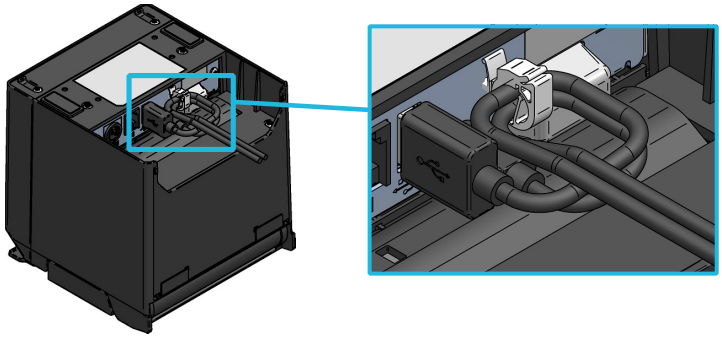

Figure 13-8　Printer and Two USB Cables Bind
(USB Type-C + Bluetooth + USB Host Model)

NOTE

- ◆ DO NOT connect except our specified peripherals and the recommended products to the USB host connector.
- ◆ Make sure to turn off the printer at connecting the peripherals.
- ◆ For using the barcode scanner, set the barcode scanner as follows.
  For setting details, see the manual of each barcode scanner.
  - For the HID class, select "English" in the setting on the keyboard type (country code).
  - Change the class to the CDC class when the multiple byte character such as Kanji is included in the two-dimensional barcode.
  - When the ASCII control code (00H to 1FH) is included in the two-dimensional barcode data, the control code is not obtained.
  - Set the Suffix (the line feed code such as CR) to avoid the following troubles.
    - ・When multiple barcodes are scanned in a short interval, the multiple barcode data responses consecutively in a once response.
    - ・When one barcode is scanned, the barcode data is divided into more than one response and responded.

HINT

- The performance and the quality of the barcode scanner's main body conform to the maker's standards.
- The HID class may take time for the read time when the two-dimensional barcode data includes a large amount of data. The read time can be shortened by changing to the CDC class.
- Regarding the barcode scanner and the USB hub to connect to the printer, the operation check has confirmed at "Recommended Products" in "19. ACCESSORIES AND CONSUMABLE PARTS".

14. SETTINGS WHEN USING 58mm PAPER WIDTH

(1) Ensure that the printer is off.

(2) Operate the release lever to open the paper cover.

(3) Put the attached partition plate L and partition plate R into the paper holder with slanting position as shown in Figure 14-1.
The partition plate L and the partition plate R are shown in white in the figure for the description.

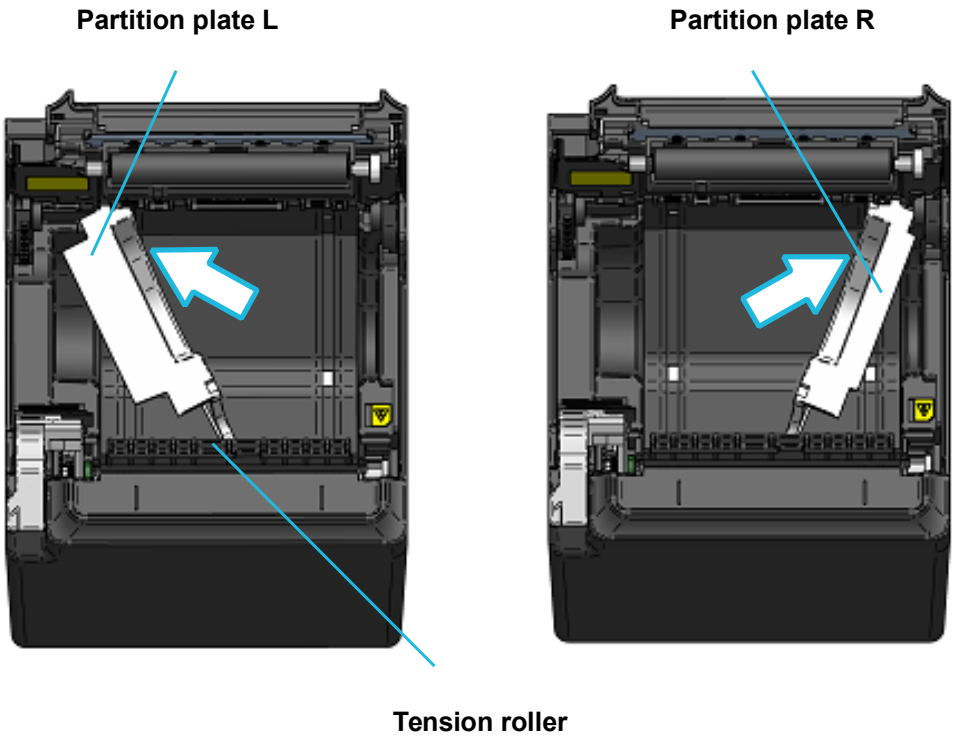

Figure 14-1 Partition Plate Installation (1)

(4) Rotate the partition plate L and partition plate R within the paper holder in the direction of the arrow shown in Figure 14-2 to make the side surface of the paper holder and the partition plate in parallel.

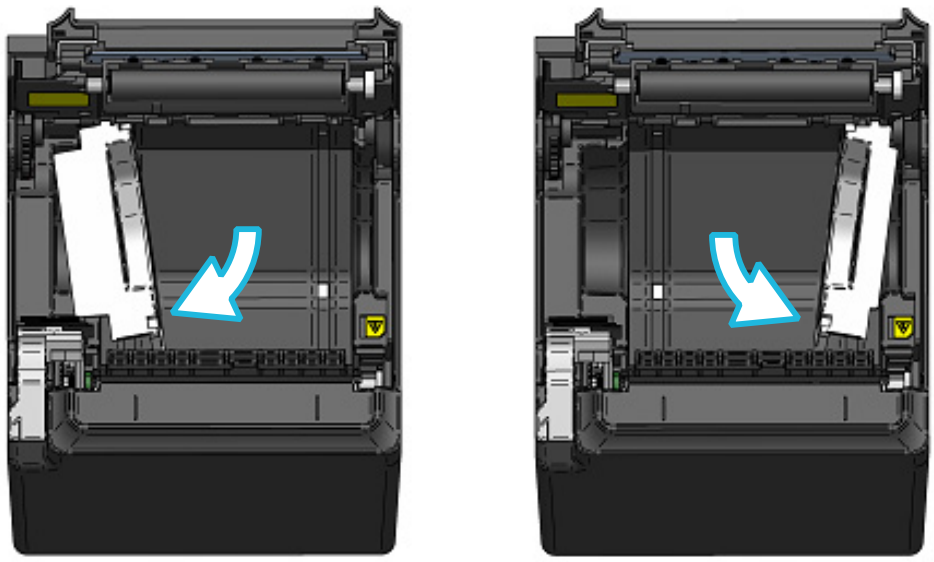

Figure 14-2 Partition Plate Installation (2)

(5) Slide down the partition plate L and the partition plate R along the inner wall of the paper holder in the direction of the arrow in Figure 14-3.
Insert the partition plate L and the partition plate R until the tabs (2 on each) on the upper are fixed in the groove on the paper holder.

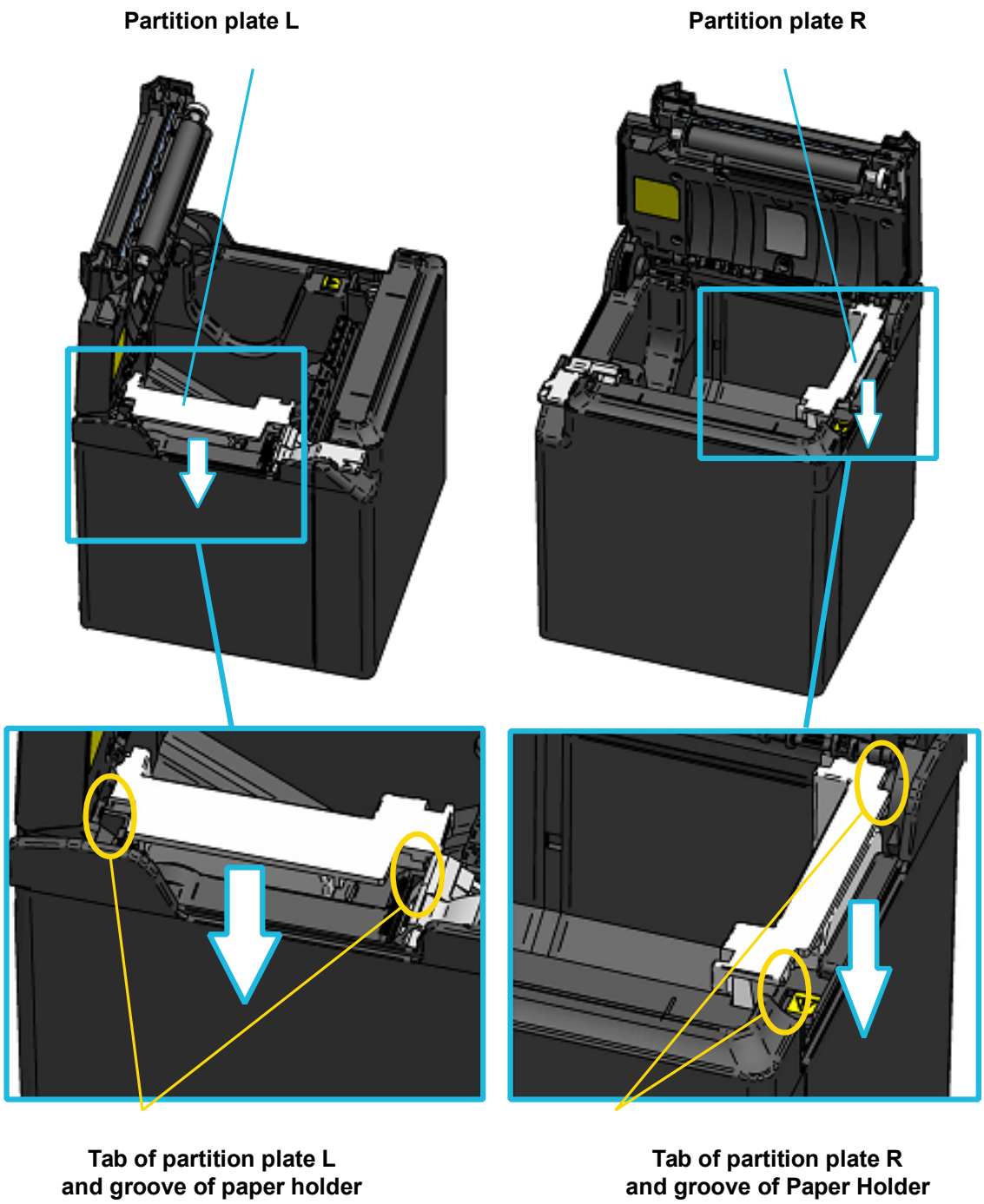

Figure 14-3 Partition Plate Installation (3)

(6) Turn the printer over, and make sure that the projection of the partition plate L and partition plate R are fit properly into the hole of the paper holder (the arrow shown in Figure 14-4).

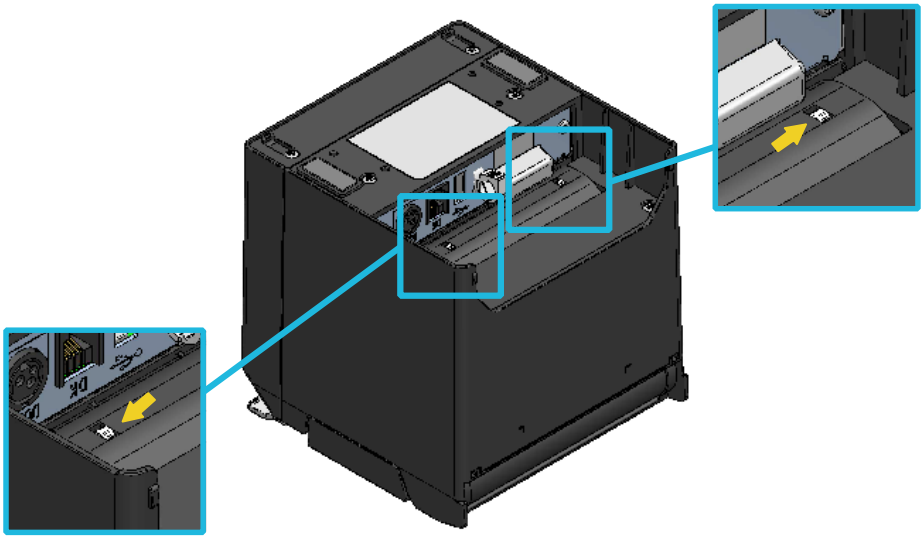

Figure 14-4 Partition Plate Installation Check

(7) Refer to “18. SPECIFICATIONS” and “20. MS SETTINGS LIST”, and set MS4-4 (Paper Width Selection) to 58 mm.

NOTE

- Set the paper width before using the printer for the first time. DO NOT change the paper width after starting to use the printer. Doing so may damage the printer.
- DO NOT push or pull the tension roller strongly.
- When the 58 mm width thermal paper is used, rubber crumbs of the platen may be generated because the platen contacts with the thermal head. Remove rubber crumbs regularly to maintain printing quality.

15. INSTALLATION OF ACCESSORIES

■Wall Mounting Kit (WLK-B01-1)

(1) Preparation
Make sure that the product and its accessories are contained.

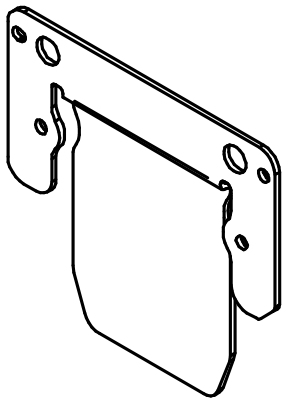

Printer Bracket

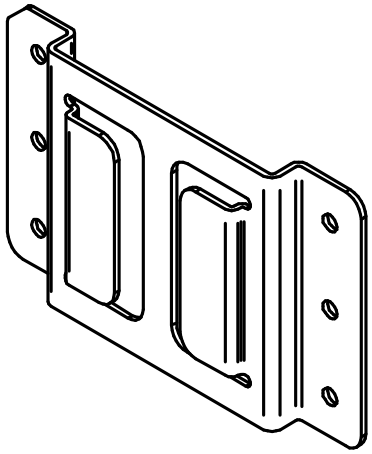

Wall Hanging Bracket

Printer Attachment Screw 4 Pieces
(Tapping Screw 3×6)

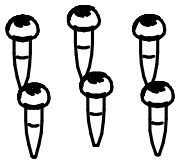

Wall Hanging Bracket
Attachment Screw 6 pieces
(Wood Screw 3.8×18)

Figure 15-1 Wall Mounting Kit (WLK-B01-1)

(2) Installation of Printer Bracket
Firmly attach printer bracket with 4 printer attachment screws as shown in Figure 15-2.
The tightening torque should be 39.2 cN•m (4 kgf•cm).

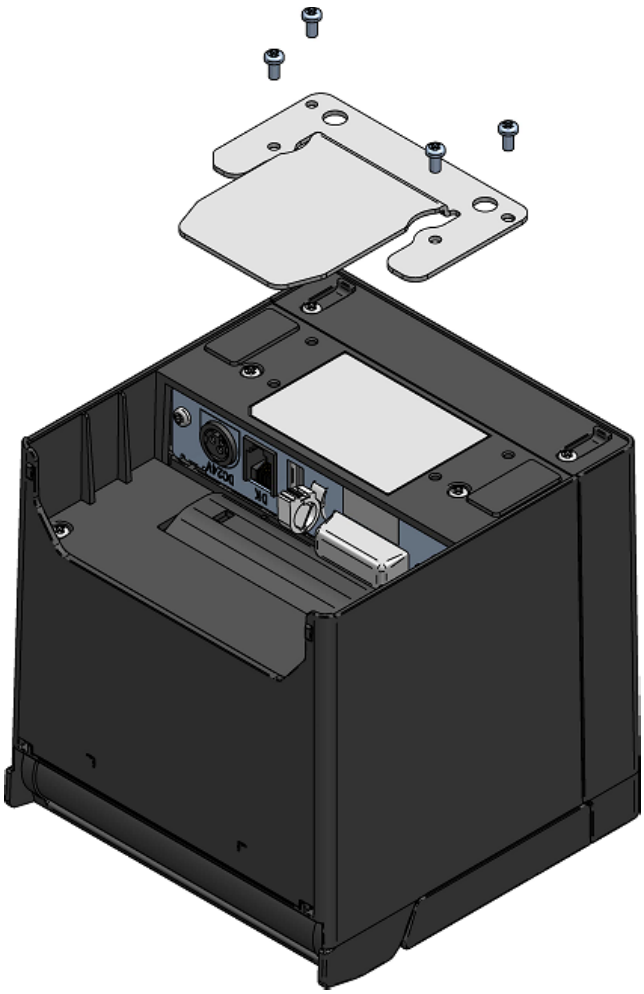

Figure 15-2 Installation of Printer Bracket

NOTE

- Before installing, ensure that the printer is off.
- Remove all cables from the printer.

(3) Installation of Wall Hanging Bracket
Fix the wall hanging bracket to the mounting surface, and then fix it firmly with 6 wall hanging bracket attachment screws. WLK-B01-1 is designed to be installed on a wall.
After installation, make sure that the wall hanging bracket is fixed on the wall securely without rattle.

NOTE

◆ The accompanying wall hanging bracket attachment screws are for installing to wood materials. DO NOT use them for other materials.

(4) Installation of the Printer
Slide the printer into the wall hanging bracket from the top to the bottom to insert the printer bracket into the wall hanging bracket, as shown in Figure 15-3.

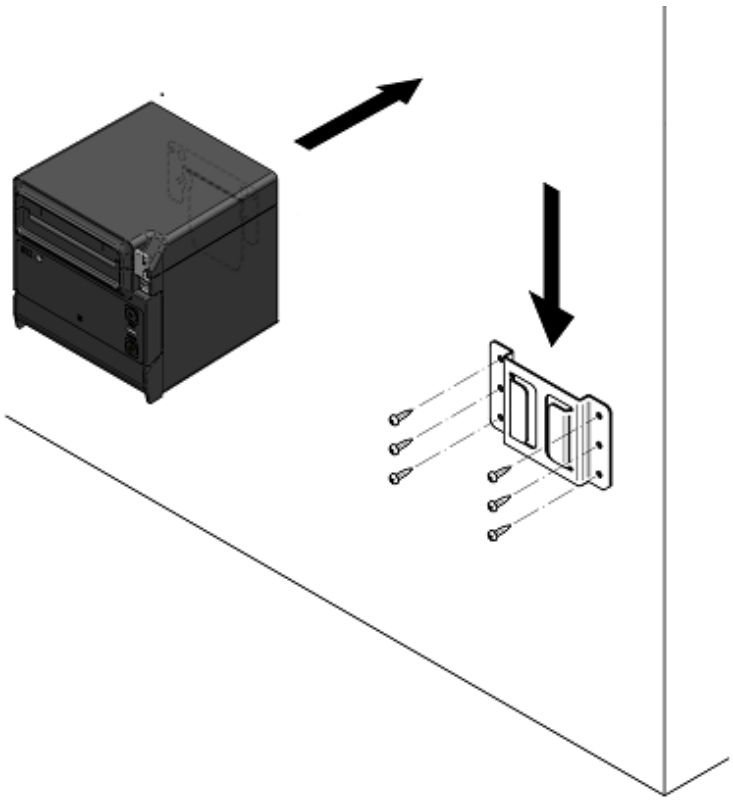

Figure 15-3 Installation of Printer

NOTE

◆ Check the place and the material/structure of the wall, and then install the printer securely. Injury or destruction of property might occur by dropping off.

16. PRINTER MAINTENANCE

The thermal head of the printer does not require user maintenance.
When paper powder accumulates, cleaning the thermal head can maintain the print quality for an extended period of time.

■Cleaning Thermal Head / Rubber Feet

(1) Turn off the printer.

(2) Unplug the AC plug of the AC cable from the outlet.

(3) Open the paper cover.

(4) Clean the thermal head and/or the rubber feet with a cotton swab moistened with a small amount of ethyl alcohol.

(5) Wait until any ethyl alcohol remaining on the thermal head dries out completely, and then close the paper cover.

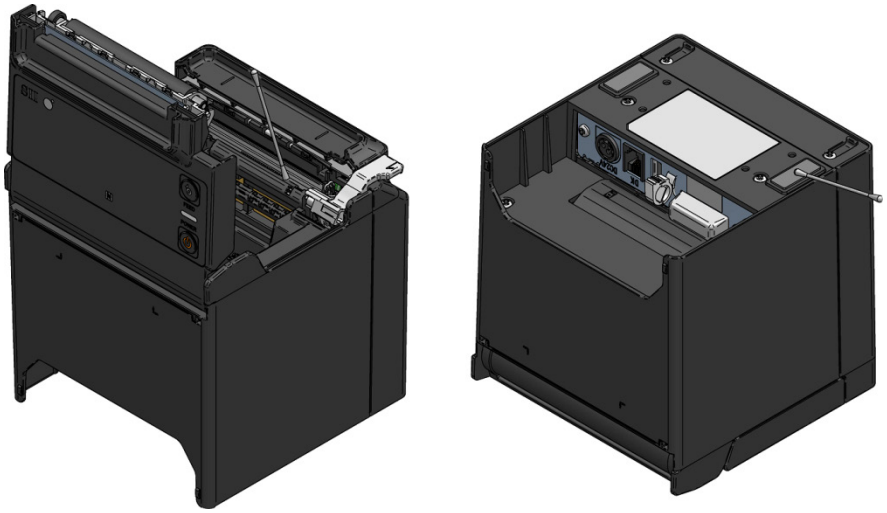

Figure 16-1 Cleaning Thermal Head / Rubber Feet

NOTE

- Clean the thermal head after it cools down.
- Be sure to wipe the thermal head with a cotton swab or other soft material.
- DO NOT wipe the platen with ethyl alcohol. When the foreign material affecting print quality adheres to the platen, remove the foreign material gently with a dry cotton swab.
- DO NOT touch the gear of the platen. Doing so may cause loss of printing quality or a failure.
- The rubber feet have the special adsorption structure. They lose adsorption force as dust or dirt adheres. However, it can be recovered by cleaning.

17. TROUBLESHOOTING

Check the following points before requesting for repair:

■The power does not turn on

- Is the specified AC adapter being used?
- Are the AC cable and the AC adapter connected correctly?
- Are the AC adapter and the printer connected correctly?

■The printer does not print or connect

- Is the interface cable connected correctly?
- Do the specifications of the interface cable conform to its specifications of this manual?
- Does the used interface conform to the printer?
- Is the Bluetooth status normal?
- Is the communication condition between the printer and the host device correct?
- Is the specified thermal paper being used? Is the paper orientation (surface/back) correct?

■An error is shown

- See “LED Indication” described in “6. EACH PART OF PRINTER”.
- Are the function settings of the printer correct?

18. SPECIFICATIONS

■Printer Specifications

Item	Specification
Model	RP-F10
Printing method	Thermal printing
Number of characters per line[*1]	Paper width 80 mm: 24 dots × 12 dots 48 digits (42 digits[*2]) 16 dots × 8 dots 72 digits (64 digits[*2]) Paper width 58 mm: 24 dots × 12 dots 36 digits (30 digits[*2]) 16 dots × 8 dots 54 digits (45 digits[*2])
Character size (H × W)	1-byte: H 24 dots × W 12 dots, H 16 dots × W 8 dots 2-byte: H 24 dots × W 24 dots, H 16 dots × W 16 dots
Number of effective dots	Paper width 80 mm: 576 dots (512 dots[*2]) Paper width 58 mm: 432 dots (360 dots[*2])
Dot density	8 dots/mm
Paper width / Printing width	80 mm / 72 mm (80 mm / 64 mm[*2]) 58 mm / 54 mm (58 mm / 45 mm[*2])
Printing speed max.	250 mm/s
Paper cutting method	Slide cutting method
Printing cutting type	Full cut, Partial cut (tab left at the center)
Operating temperature	5°C to 45°C (41°F to 113°F)
Relative humidity[*3]	10%RH to 90%RH
Dimensions (W × D × H)	127 mm × 127 mm × 127 mm[*4]
Mass	Approx. 840 g (excluding the thermal paper)
Input voltage	DC24.0 V ±10%
Current consumption[*5]	Waiting : Approx. 20 mA avg. Printing (print rate 25%) : Approx. 4.7 A max. Printing (print rate 100%) : Approx. 9.0 A max.

*1: This is the numerical value when character spacing is 0 dots.
*2: This is the number when 512 dots / 360 dots is selected by MS4-5 (Number of Effective Dots Selection).
*3: The guaranteed humidity at each temperature is within the range shown in Figure 18-1.
*4: Excluding projections
*5: Condition: Dynamic division 288 dots printing

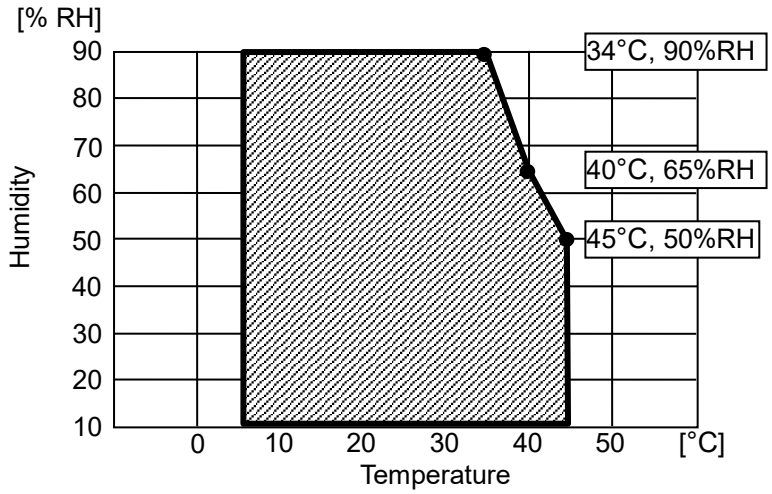

Figure 18-1 Operating Temperature and Humidity Range

■AC Adapter Specifications

(Specified Accessories)

Item	Specification
Model	PW-G2421-W1
Input voltage	AC100 to 240 V, 50/60 Hz
Rated output	DC24.0 V, 2.1 A
Dimensions (W × D × H)	120 mm × 52.5 mm × 32.5 mm*
Mass	Approx. 260 g

*: Excluding the cable.

(Specified Accessories)

Item	Specification
Model	PW-G2421-W2
Input voltage	AC100 to 240 V, 50/60 Hz
Rated output	DC24.0 V, 2.1 A
Dimensions (W × D × H)	127 mm × 51.5 mm × 32 mm*
Mass	Approx. 280 g

*: Excluding the cable.

■Interface Specifications

USB interface specifications

Item	Specification
Version	Ver. 2.0
Printer data transmission mode	Bulk transfer (12 Mbps)

Ethernet interface specifications

Item	Specification
Communication standard	10Base-T, 100Base-TX

Bluetooth interface specifications

Item	Specification
Version	Ver. 3.0
Transmission power class	Class 2
Profile	SPP, iAP2

NFC tag specifications

Item	Specification
Communication standard	ISO14443 typeA
Frequency	13.56 MHz

■Sale Destinations

Sale destinations for the printer and specified accessories are listed below.

✓: Sale Destinations

Country/Region*1	RP-F10		AC Adapter	AC Cable
	(Model with Bluetooth)	(Other models)		
Japan	✓	✓	PW-G2421-W1 PW-G2421-W2	CB-JP07-20A CB-JP08-20A
EU EFTA	✓	✓		CB-CE04-20A CB-CE05-20A
Turkey	-	✓		
UK	✓	✓		CB-UK03-20A CB-UK04-20A
USA Canada	✓	✓		CB-US05-20A CB-US06-20A
Brazil	-	✓		*2

*1: Ask your SII sales representative when you want to operate the products in countries/regions other than those listed above.
*2: Use the AC cable of 2.0 meters long that complies with safety standards in Brazil.

19. ACCESSORIES AND CONSUMABLE PARTS

■Specified Accessories

Name	Model
AC adapter	PW-G2421-W1 PW-G2421-W2
AC cable*	CB-JP07-20A CB-JP08-20A CB-US05-20A CB-US06-20A CB-CE04-20A CB-CE05-20A CB-UK03-20A CB-UK04-20A
Wall mounting kit	WLK-B01-1
USB cable Powered USB cable	IFC-U02-2 IFC-V01-1

*: The shape of an outlet differs by country. Confirm it before using.

■Specified Peripherals

Name	Model
Drawer	DRW-A01*1
External buzzer	BZR-A01-1
Customer display	DSP-A01-K1*2 DSP-A01-W1*2

*1: See "DSP-A01 SERIES CUSTOMER DISPLAY TECHNICAL REFERENCE" for details.
*2: See "DSP-A01 SERIES CUSTOMER DISPLAY USER'S GUIDE" for details.

■Recommended Products (Barcode Scanner)

Model	Manufacturer	Readable barcode
F560-GV-USB	CINO	One-dimensional barcode
DS4308-USBR	Zebra	One-dimensional barcode Two-dimensional barcode
DS4608-USBR	Zebra	One-dimensional barcode Two-dimensional barcode
Voyager 1450g	Honeywell	One-dimensional barcode Two-dimensional barcode

■Recommended Products (USB Hub)

Model	Manufacturer
A7516011	Anker
BSH4U120U3BK	BUFFALO
U3H-A416BBK	ELECOM

■Specified Roll Paper

Model	Specifications
TP-E23C-1	Paper width 58 mm
TP-B10CH	Paper width 80 mm

■Specified Thermal Paper*

Model	Manufacturer
PD160R-N	Oji Paper
TP50KR-2Y	Nippon Paper
TF60KS-E	Nippon Paper
P220VBB-1	Mitsubishi Paper Mills.
KT48FA	Papierfabrik August Koehler

*: We do not handle.

When using different roll paper or thermal paper from the one specified, the printing quality or specified life of the thermal head would not be guaranteed.

20. MS SETTINGS LIST

: Default value

General Setting 1

MS	Function	Value	
		0	1
1-1 to 3	Reserved	-	**Fixed**
1-4 to 5	Standby LED Selection (Standby LED)	00B : Aqua 01B : Green 10B : Off **11B : Blue**	
1-6	Reserved	-	**Fixed**
1-7	Auto Activation by AC Selection (Auto Activation by AC)	Disable	**Enable**
1-8	POWER Switch Function Selection (Power SW)	Disable	**Enable**

General Setting 2 (External Buzzer Setting When Error Occurs)

MS	Function	Value	
		0	1
2-1 to 2	Buzzer Count Selection (Buzzer Count)	**00B : None** 01B : Once 10B : Thrice 11B : Continue	
2-3 to 4	Buzzer Pattern Selection (Buzzer Pattern)	**00B : Pattern1** 01B : Pattern2 10B : Pattern3 11B : Pattern4	
2-5	Buzzer Volume Selection (Buzzer Volume)	Low	**Loud**
2-6 to 8	Reserved	-	**Fixed**

General Setting 3 (External Buzzer Setting When Cut Process Completes)

MS	Function	Value	
		0	1
3-1 to 2	Buzzer Count Selection (Buzzer Count)	**00B : None** 01B : Once 10B : Thrice 11B : Five Times	
3-3 to 4	Buzzer Pattern Selection (Buzzer Pattern)	**00B : Pattern1** 01B : Pattern2 10B : Pattern3 11B : Pattern4	
3-5	Buzzer Volume Selection (Buzzer Volume)	Low	**Loud**
3-6 to 8	Reserved	-	**Fixed**

General Setting 4

MS	Function	Value	
		0	1
4-1 to 2	Number of Dots Selection for Fixed Division and Dynamic Division (Division Method)	00B: Fixed 2-division / Dynamic division 96 dots (2 div. / 96 dots) 01B: Fixed 2-division / Dynamic division 144 dots (2 div. / 144 dots) 10B: Fixed 2-division / Dynamic division 144 dots (2 div. / 144 dots) **11B: Fixed 2-division / Dynamic division 288 dots (2 div. / 288 dots)**	
4-3	Division Drive Method Selection (Head Drive)	Fixed division (Fixed)	**Dynamic division (Dynamic)**
4-4	Paper Width Selection (Paper Width)	58 mm	**80 mm**
4-5	Number of Effective Dots Selection (Number of Effective Dots)	512 dots / 360 dots	**576 dots / 432 dots**
4-6	Reserved	-	**Fixed**
4-7 to 8	Maximum Print Speed Selection (Print Speed)	00B : Prohibition 01B : Middle (Quality) 10B : Middle (Silent) **11B : High**	

General Setting 5

MS	Function	Value	
		0	1
5-1	Automatic Status Response Selection (Auto Status Back)	**Enable**	Disable
5-2	Initialized Response Selection (Init. Response)	**Enable**	Disable
5-3	Data Discard Selection When Error Occurs (Error Through)	**Enable**	Disable
5-4	Data Discard Selection When Output Buffer Full Occurs (Response Data Discarding)	Enable	**Disable**
5-5	Reserved	-	**Fixed**
5-6 to 7	Initialization Performance Selection After Paper Setting (Paper Set Handle)	00B: Disable 01B: Stamp & cut (Stamp&cut) **10B: Initial cut (Standard)** 11B: Disable	
5-8	Cutting Mode Selection After Paper Setting (Cutting Method)	Partial cut (Partial)	**Full cut (Full)**

General Setting 6

MS	Function	Value	
		0	1
6-1 to 8	Print Density Selection (Print Density)	00000000B: 70% 00000001B: 75% 00000010B: 80% 00000011B: 85% 00000100B: 90% 00000101B: 95% **00000110B: 100%** Other than above: Prohibition	00000111B: 105% 00001000B: 110% 00001001B: 115% 00001010B: 120% 00001011B: 125% 00001100B: 130%

General Setting 7

MS	Function	Value	
		0	1
7-1 to 8	Thermal Paper Selection (Thermal Paper)	**00000000B: Standard** 00000001B: TP50KR-2Y 00000010B: PD160R 00000011B: TF60KS-E 00000100B: P220VBB-1 00000101B: Alpha400-2.1 00000110B: KT48FA Other than those above: Prohibition	

General Setting 13

MS	Function	Value	
		0	1
13-1	Kanji Code System Selection (Kanji Code)	Shift-JIS Code	**JIS Code**
13-2	180° Reverse Function Selection (Reverse Function)	Enable	**Disable**
13-3	Realtime Command Selection (Realtime Command)	Disable	**Enable**
13-4 to 8	Reserved	-	**Fixed**

International Character Setting

MS	Function	Value	
		0	1
15	International Character Setting (International Character)	**00000000B: USA** 00000001B: France 00000010B: Germany 00000011B: United Kingdom 00000100B: Denmark I 00000101B: Sweden 00000110B: Italy 00000111B: Spain I 00001000B: Japan 00001001B: Norway 00001010B: Denmark II 00001011B: Spain II 00001100B: Latin America 00010001B: Arabia Other than those above: Prohibition	

Character Code Table Setting

MS	Function	Value	
		0	1
16	Character Code Table Setting (Character Code Table)	**00000000B: USA, Standard Europe (Code Page437)** 00000001B: Katakana 00000010B: Multilingual (Code Page850) 00000011B: Portuguese (Code Page860) 00000100B: Canadian-French (Code Page863) 00000101B: Nordic (Code Page865) 00001101B: Turkish (Code Page857) 00001110B: Greek (Code Page737) 00001000B: Latin (Code Page1252) 00001001B: Russian (Code Page866) 00001010B: Eastern Europe (Code Page852) 00001011B: Euro (Code Page858) 00100010B: Cyrillic (Code Page855) 00100101B: Arabic (Code Page864) 00101101B: Central European (Code Page1250) 00101110B: Cyrillic (Code Page1251) 00101111B: Greek (Code Page1253) 00110000B: Turkish (Code Page1254) 11111111B: User Page Other than those above: Prohibition	

General Setting 17

MS	Function	Value	
		0	1
17-1 to 2	Paper Saving Setting (Paper Saving)	00B: Mode1 01B: Mode2 10B: Mode3 **11B: Disable**	
17-3	Feed Backward Setting After Paper Cutting (Backfeed After Cut)	Enable	**Disable**
17-4 to 8	Reserved	-	**Fixed**

General Setting 18 (External Buzzer Setting With Commands)

MS	Function	Value	
		0	1
18-1 to 2	Buzzer Count Selection (Buzzer Count)	**00B: None** 01B: Once 10B: Thrice 11B: Five Times	
18-3 to 4	Buzzer Pattern Selection (Buzzer Pattern)	**00B: Pattern1** 01B: Pattern2 10B: Pattern3 11B: Pattern4	
18-5	Buzzer Volume Selection (Buzzer Volume)	Low	**Loud**
18-6 to 8	Reserved	-	**Fixed**

USB Host Setting

MS	Function	Value	
		0	1
38-1	Scanner Automatic Status Response Selection (Scanner Auto Status Back)	Enable	**Disable**
38-2 to 8	Reserved	-	**Fixed**

Bluetooth Setting

MS	Function	Value	
		0	1
39-1	iOS Auto Connection Selection (Auto Connection)	**Enable**	Disable
39-2	Security Mode Selection (Security Mode)	PIN code (PIN)	**SSP**
39-3	Inquiry Response Selection (Inquiry Response)	Always	**Pairing Mode**
39-4	Association Model Selection (AssocModel)	Numeric Comparison	**Just Works**
39-5 to 8	Reserved	-	**Fixed**

USB Setting

Function	Value	
USB Device Class	**Printer**	Vendor
USB Communication*	**Enable**	Disable
Connection Mode*	**iOS/Android**	Windows

*: Only for USB Type-C + Bluetooth + USB host model.

Seiko Instruments Inc.
563, Takatsukashinden, Matsudo-shi,
Chiba 270-2222, Japan
Print System Division
Tel: +81-47-709-0925
Fax: +81-47-709-1793

Seiko Instruments U.S.A., Inc.
Thermal Printer Div.
21221 S. Western Avenue, Suite 250, Torrance, CA 90501, U.S.A.
Tel: +1-800-688-0817 Fax: +1-310-517-7779

Seiko Instruments GmbH (Economic operator)
Siemensstrasse 9, D-63263 Neu-Isenburg, Germany
Tel: +49-6102-297-0 Fax: +49-6102-297-50100
info@seiko-instruments.de

Seiko Instruments Trading (H.K.) Ltd.
7/F, Ying Tung Industrial Building, 802 Lai Chi Kok Road, Kowloon, Hong Kong
Tel: +852-2494-5160 Fax: +852-2424-0901

Seiko U.K. Limited (Authorized Representative in the United Kingdom)
SC House, Vanwall Road, Maidenhead, Berkshire, SL6 4UW

Download page: https://www.sii.co.jp/sps/eg/download/index.html

(Specifications are subject to change without notice.)