SII

USER'S GUIDE

Thermal Printer

RP-E10 SERIES

Read this user's guide carefully before using the printer.

Keep this user's guide in a place where it can be accessed quickly.

Seiko Instruments Inc.

U00127526500	May 2012
U00127526501	July 2012
U00127526502	January 2013
U00127526503	November 2013
U00127526504	April 2014
U00127526505	July 2014
U00127526506	November 2014
U00127526507	November 2014
U00127526508	April 2016
U00127526509	January 2018
U00127526510	November 2019
U00127526511	November 2020
U00127526512	October 2021
U00127526513	December 2022
U00127526514	April 2025
U00127526515	July 2026

Copyright ©2012-2026 by Seiko Instruments Inc. All rights reserved.

The information contained herein is the property of SII and shall not be reproduced in whole or in part without prior written approval of SII.

SII reserves the right to make changes in the specifications and materials contained herein without notice and shall not be responsible for any damages (including consequential) caused by reliance on the materials presented, including but not limited to typographical, arithmetic, and listing errors.

This product is developed as a product for industrial equipment use.

SII is a trademark of Seiko Instruments Inc.
Android™ is a trademark of Google LLC.
IOS is a trademark or registered trademark of Cisco in the U.S. and other countries and is used under license.
All other trademarks are the properties of their respective companies.

Applicable EC Directive and Standards

Product: Thermal Printer RP-E10 (with AC adapter PW-E2427-W2)

Directive:	Title
2014/30/EU	EC Electromagnetic Compatibility Directive
2014/35/EU	EC Low Voltage Directive (with AC adapter only)
2011/65/EU (Commission Delegated Directive (EU) 2015/863)	Restriction of the use of certain hazardous substances (RoHS) Directive

Standards
- EN 55032
- EN IEC 61000-3-2
- EN 61000-3-3
- EN 55035
- EN 62368-1 (with AC adapter only)
- EN IEC 63000

Restrictions: This product is for use only with nominal voltage in each country.

Product: AC adapter PW-E2427-W2

Directive:	Title
2014/30/EU	EC Electromagnetic Compatibility Directive
2014/35/EU	EC Low Voltage Directive
2011/65/EU (Commission Delegated Directive (EU) 2015/863)	Restriction of the use of certain hazardous substances (RoHS) Directive

Standards

EN 55032
EN IEC 61000-3-2
EN 61000-3-3
EN 55035
EN 62368-1
EN IEC 63000

Applicable UK Directive and Standards

Product: Thermal Printer RP-E10 (with AC adapter PW-E2427-W2)

Directive:

Electromagnetic Compatibility Regulations 2016
Electrical Equipment (Safety) Regulations 2016
The Restriction of the Use of Certain Hazardous Substances in Electrical and Electronic Equipment Regulations 2012

Standards

BS EN 55032
BS EN IEC 61000-3-2
BS EN 61000-3-3
BS EN 55035
BS EN 62368-1
BS EN IEC 63000

UK
CA

Restrictions: This product is for use only with nominal voltage in each country.

Product: AC adapter PW- E2427-W2

Directive:

Electromagnetic Compatibility Regulations 2016
Electrical Equipment (Safety) Regulations 2016
The Restriction of the Use of Certain Hazardous Substances in Electrical and Electronic Equipment Regulations 2012

Standards

BS EN 55032
BS EN IEC 61000-3-2
BS EN 61000-3-3
BS EN 55035
BS EN 62368-1
BS EN IEC 63000

Federal Communications Commission (FCC) compliance statement

This equipment has been tested and found to comply with the limits for a Class A digital device, pursuant to part 15 of the FCC Rules. These limits are designed to provide reasonable protection against harmful interference when the equipment is operated in a commercial environment.
This equipment generates, uses, and can radiate radio frequency energy and, if not installed and used in accordance with the instruction manual, may cause harmful interference to radio communications. Operation of this equipment in a residential area is likely to cause harmful interference in which case the user will be required to correct the interference at his own expense.

Innovation, Science and Economic Development (ISED) compliance statement

This device contains licence-exempt transmitter(s)/receiver(s) that comply with Innovation, Science and Economic Development Canada's licence-exempt RSS(s). Operation is subject to the following two conditions:
(1) This device may not cause interference
(2) This device must accept any interference, including interference that may cause undesired operation of the device.

1. INTRODUCTION

This manual describes how to handle RP-E10 thermal printer (hereinafter referred to as the printer), AC adapter, AC cable, and other accessories.

Read through the "2. SAFETY PRECAUTIONS" and "3. OPERATING PRECAUTIONS" carefully before using the products, and handle them safely and properly.
Keep this manual in a place where it can be accessed quickly.
See the "RP-E10 SERIES THERMAL PRINTER TECHNICAL REFERENCE" for more detailed function and specifications on the printer.

This manual consists of the following sections.

1. INTRODUCTION 1
2. SAFETY PRECAUTIONS 2
3. OPERATING PRECAUTIONS 5
4. PREPARATION 8
5. IDENTIFYING THE MODEL TYPE 10
6. EACH PART OF PRINTER 11
7. POWER CONNECTION 15
8. THERMAL PAPER SETTING 16
9. ADJUSTMENT OF REMAINING THERMAL PAPER 19
10. PREVENTION AND TREATMENT OF PAPER JAM 21
11. TEST PRINT 23
12. FUNCTION SETTINGS 24
13. CONNECTING TO THE HOST DEVICE 25
14. SETTINGS WHEN USING 58mm PAPER WIDTH 28
15. INSTALLATION OF ACCESSORIES 29
16. PRINTER MAINTENANCE 34
17. TROUBLESHOOTING 35
18. SPECIFICATIONS 36
19. ACCESSORIES AND CONSUMABLE PARTS 39

2. SAFETY PRECAUTIONS

In this SAFETY PRECATIONS, the following symbols are used to ensure safe and proper use of products and prevent from damaging devices.

WARNING	Failure to follow the instructions marked with this symbol could result in severe personal injury or death.
CAUTION	Failure to follow the instructions marked with this symbol could result in minor personal injury or property damage.

About symbols

The symbol indicates information which you should pay attention to (including danger and warnings).

The symbol indicates information about prohibited procedures.

indicates "Disassembly is prohibited."

The symbol indicates information about obligated or instructed procedures.

indicates "Unplug the power plug from an outlet."

OPERATING PRECAUTIONS

⚠WARNING

Never attempt the followings. Failure to follow the instructions leads to fire, electric shock, or accident.	
	Do not insert any foreign objects such as a piece of metal or any liquid into the products.
	Do not touch the metal parts of the terminal, AC plug, and DC plug. To avoid short circuits, prevent terminals of the products, AC plug, and DC plug from touching any conductor such as metal.
	Take care not to spill liquid on the products.
	Do not touch the products with wet hands.
	Do not disassemble or reconstruct the products.
	Use the printer only with specified AC adapter and AC cable.
	Do not use an AC adapter at a voltage other than specified.
	Keep the AC plug and the DC plug away from dust and metal objects.
	Make sure the AC plug and DC plug are securely plugged in when using the products.
	Do not damage the AC cable, AC plug and DC plug. Do not bend, pull or twist the AC cable forcibly or place heavy stuff on it.
Be sure to observe the following instructions. Failure to follow the instructions may lead to fire, electric shock, or accident.	
	Be sure to use only in countries where the products meet the law and the regulations. Using non-compliant products may endanger the safety of products or be considered against law and regulations.
	Be sure to hold the plug when unplugging AC cable from an outlet.

■ Procedures to take when in trouble

Follow the instructions in the following cases. Failure to follow the instructions may lead to fire, electric shock, and accident.	
	Turn off the printer and unplug the AC plug from an outlet in any of the following cases with the products: ◆ Abnormal status continues. ◆ The printer is giving off smoke, an unusual smell, excessive heat, or an unusual noise. ◆ A piece of metal, water or other foreign objects get into the printer. ◆ The case is broken.
	When AC cable is damaged, unplug the AC plug from an outlet. Do not use a damaged AC cable.

⚠CAUTION

Observe the following instructions. Failure to follow the instructions may lead fire, electric shock, or accident.	
	Turn off the printer and unplug the AC plug from an outlet when not in use for a long time or before maintenance.
	Do not use or store the products in the following locations: ◆ Locations exposed to direct sunlight or high temperature ◆ Locations exposed to high humidity, a lot of dust, and liquid ◆ Locations subject to strong vibration or unstable locations
	Do not cover the products with cloth when in use.
	Do not touch the thermal head immediately after printing because it gets hot. Be sure to allow it to cool down before cleaning a paper jam or cleaning its head.
	The auto cutter printer has an exposed cutter blade in the paper outlet. Do not insert fingers into printer. Avoid touching the exposed blade while the printer cover is open.
	Keep loose objects such as long hair away from the printer while the printer operates. When they fall into the printer, it may cause personal injury or damage the printer.

3. OPERATING PRECAUTIONS

Be careful of the following precautions and use the products properly in order to deliver and maintain the full performance of the products.

■ Using the Products

- ◆ Be careful not to drop or bump the products on a hard surface.
- ◆ DO NOT install the products in direct sunlight.
- ◆ Be careful about the ambient temperature and humidity.
  Suitable environment for the use of the printer is as follows:
  - Range of the temperature: 5°C to 45°C (41°F to 113°F)
  - Range of the humidity: 10%RH to 90%RH

  Refer to “RP-E10 SERIES THERMAL PRINTER TECHNICAL REFERENCE” for the certifiable humidity range at each temperature.
- ◆ DO NOT install the products near devices that generate strong electromagnetic fields such as a copy machine motor.
- ◆ DO NOT install the products in a location that is subject corrosive gas, siloxane and so on.
- ◆ DO NOT connect the AC adapter or the AC cable to the same outlet with devices that generate noise.
- ◆ DO NOT open the paper cover during printing or cutting.
- ◆ DO NOT connect or disconnect the interface cable during printing or transmission. DO NOT touch the plug of the interface cable during printing.
- ◆ Turn off the printer when not in use.
  In addition, when the printer is not used for a long time, unplug the AC plug from an outlet, and set thermal paper to protect the platen.
- ◆ Clean the products’ case using soft, lint-free cloth. DO NOT use alcohol or other solvent.
- ◆ Before using, always clean the terminals using a dry, soft and lint-free cloth. When the terminals are dirty, it may cause contact failure.
- ◆ DO NOT touch the thermal head directly. Doing so may result in poor quality due to the dirt or damage by the static electricity.
- ◆ DO NOT use the thermal head with it is wet. Doing so may damage the printer.
- ◆ When cleaning the thermal head, wipe the thermal head with a cotton swab or other soft material.
- ◆ The AC adapter may get hot when in use. This is normal and is not a malfunction.
- ◆ Using the printer under low temperature environment or printing at a high print rate might cause unclear printing or generate loud sound. This is not a failure in the printer, but an inherent paper phenomenon.
- ◆ When handling the printer, be aware of static electricity. When the static electricity is discharged, this could cause a USB communication failure. When this problem occurs, disconnect the USB plug that is connected to the host device and wait a few seconds before connecting it again.
- ◆ DO NOT print without the thermal paper.
- ◆ DO NOT drop or insert any foreign objects such as clips, pins, and screws into the internal parts or slot of the products.
- ◆ DO NOT drop any liquid or spray a solvent to the products.
- ◆ NEVER use sharp object such as pen tip to push the switch on the operation panel.

- DO NOT use thermal papers taped together.
- NEVER pull out the thermal paper when the thermal paper is set.
- Make sure not to injure your body or other objects by the plate edge.
- Unplug the AC plug from an outlet when something goes wrong with the printer.
- NEVER disassemble the printer without a serviceman.
- Be careful not to get your fingers or hands caught in the printer when opening or closing the paper cover.
- In order to ensure the function and the safety of the product, be sure to observe the installation direction.
- DO NOT connect the RJ connector to a phone line. It should be used as the drawer kick connector.
- NEVER connect a USB cable to the RJ connector.
- As the plated sheet steel is used in the printer, the edge face might rust.
- When moving the printer from the installation site, hold the printer tightly with both hands, then lift it upward slowly to leave the rubber feet from the installation surface. Lifting it rapidly or moving it horizontally may peel the entire rubber feet, peel their surfaces, or damage the outer case.

■ Thermal Paper Handling

- Store the thermal paper in a cool, dry, and dark place.
- DO NOT rub the thermal paper with hard objects.
- DO NOT leave the thermal paper near organic solvents.
- DO NOT allow plastic film, erasers, or adhesive tape to touch the thermal paper for long periods.
- DO NOT stack the thermal paper with diazo copies immediately after copying.
- DO NOT use chemical glue.
- Always use the specified thermal paper. See "19 ACCESSORIES AND CONSUMABLE PARTS" for details.

■ Precautions on Discarding

When discarding used products, discard them according to the disposal regulations and rules of each respective district.

■ Notations

The following 2 types of notations are used throughout this manual to denote operating precautions and items to remember besides the symbols shown in "2. SAFETY PRECAUTIONS":

NOTE

◆ Operation Precautions

This box contains items that may lead to a malfunction or to a deterioration of performance when not followed.

HINT

• Items to Remember

This box contains helpful hints to remember when using the products.

4. PREPARATION

Make sure that the printer and its accessories are contained.

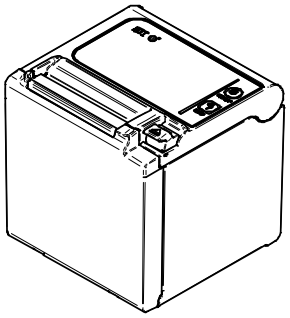

Printer (Top paper eject model)

or

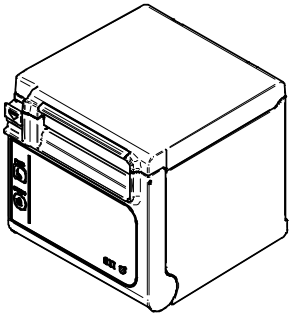

Printer (Front paper eject model)

Safety Precautions

Quick Start Guide

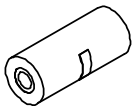

Sample Thermal Paper

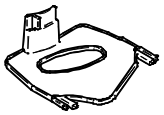

58 mm Paper Width
Partition Plate

58 mm Paper Width
Spacer Plate

Models including the AC adapter, AC cable, and interface cable are also available.

Keep the package and packing materials for future transportation or long-term storage.
The available accessories are shown below.
See "18 SPECIFICATIONS" and "19 ACCESSORIES AND CONSUMABLE PARTS", and be sure to purchase our specified products listed on these references.
See "5. IDENTIFYING THE MODEL TYPE" for the models which include accessories.

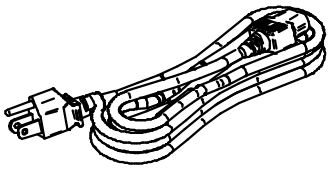

AC cable
(the figure shows CB-US05-20A)

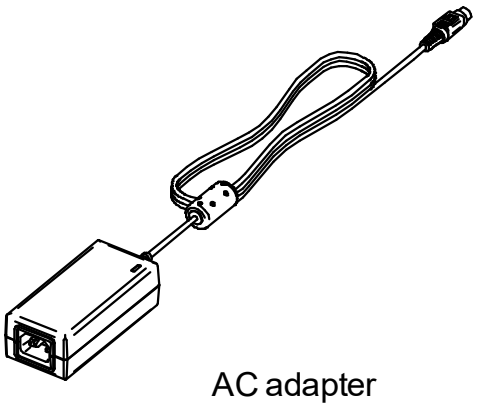

AC adapter

USB cable

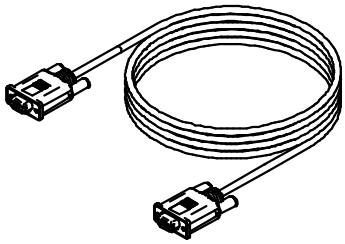

Serial cable

Powered USB cable

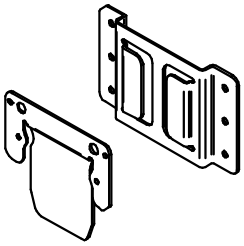

Wall mounting kit

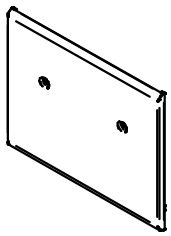

Back plate

5. IDENTIFYING THE MODEL TYPE

The printer model is identified as follows:

RP-E10-K3FJ1-U1C3

Direction of paper eject
0: From the top
1: From the front

Case color
W: White
K: Black

Interface
S: Serial
U: USB
E: Ethernet
1: USB + Serial*

Optional cable included
Contact us for details.

*: Serial with power supply pins.

When the printer is incorporated into your equipment and then supplied electric power from the equipment, follow the rated value of input voltage for RP-E10 described in the specifications of "18 SPECIFICATIONS", and "2.3 POWER SUPPLY SPECIFICATIONS" in "RP-E10 SERIES THERMAL PRINTER TECHNICAL REFERENCE".
When using a power supply other than the specified AC adapter, use a power supply at your own risk under the safety standard and EMC regulations.

6. EACH PART OF PRINTER

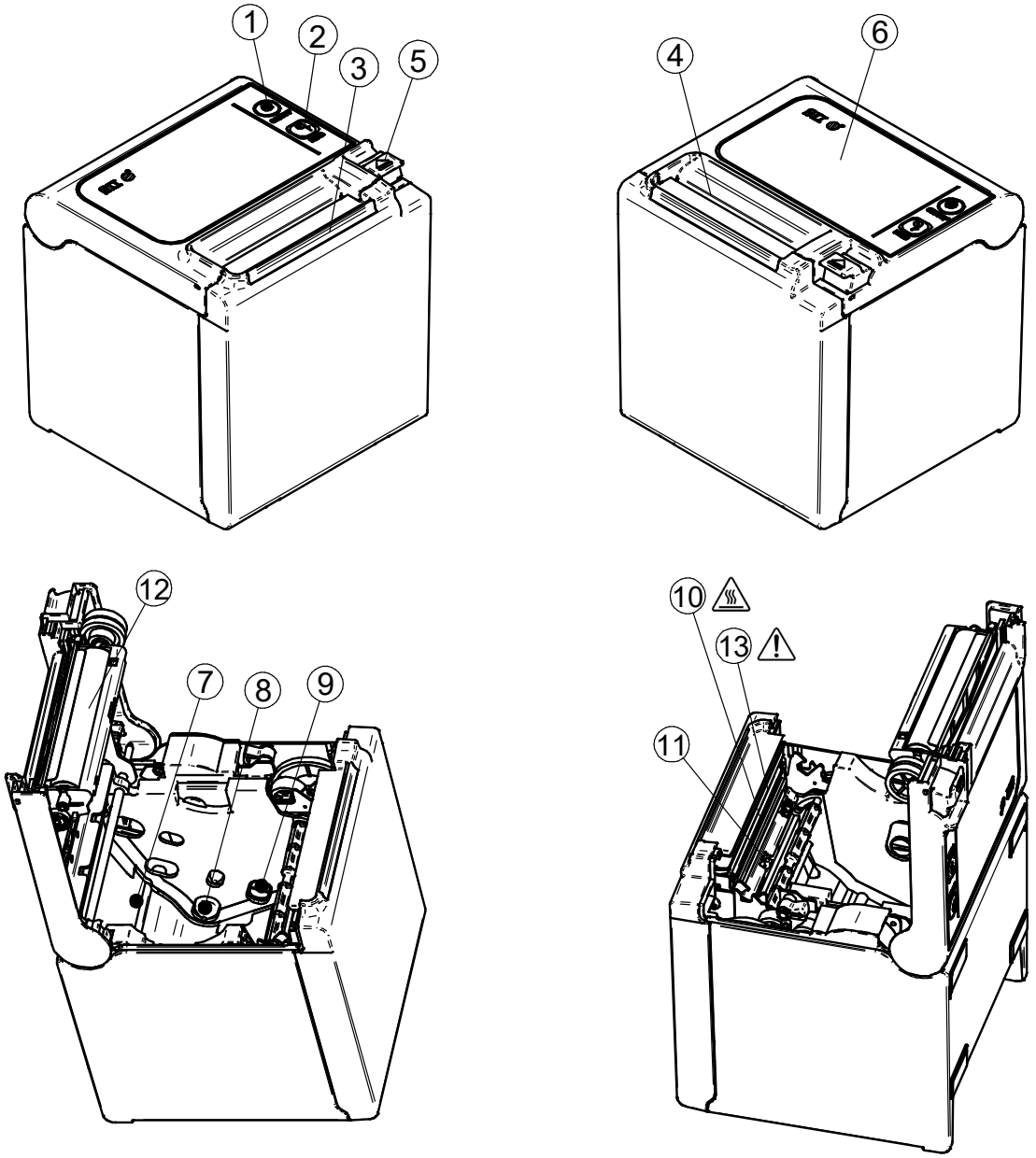

Top paper eject model

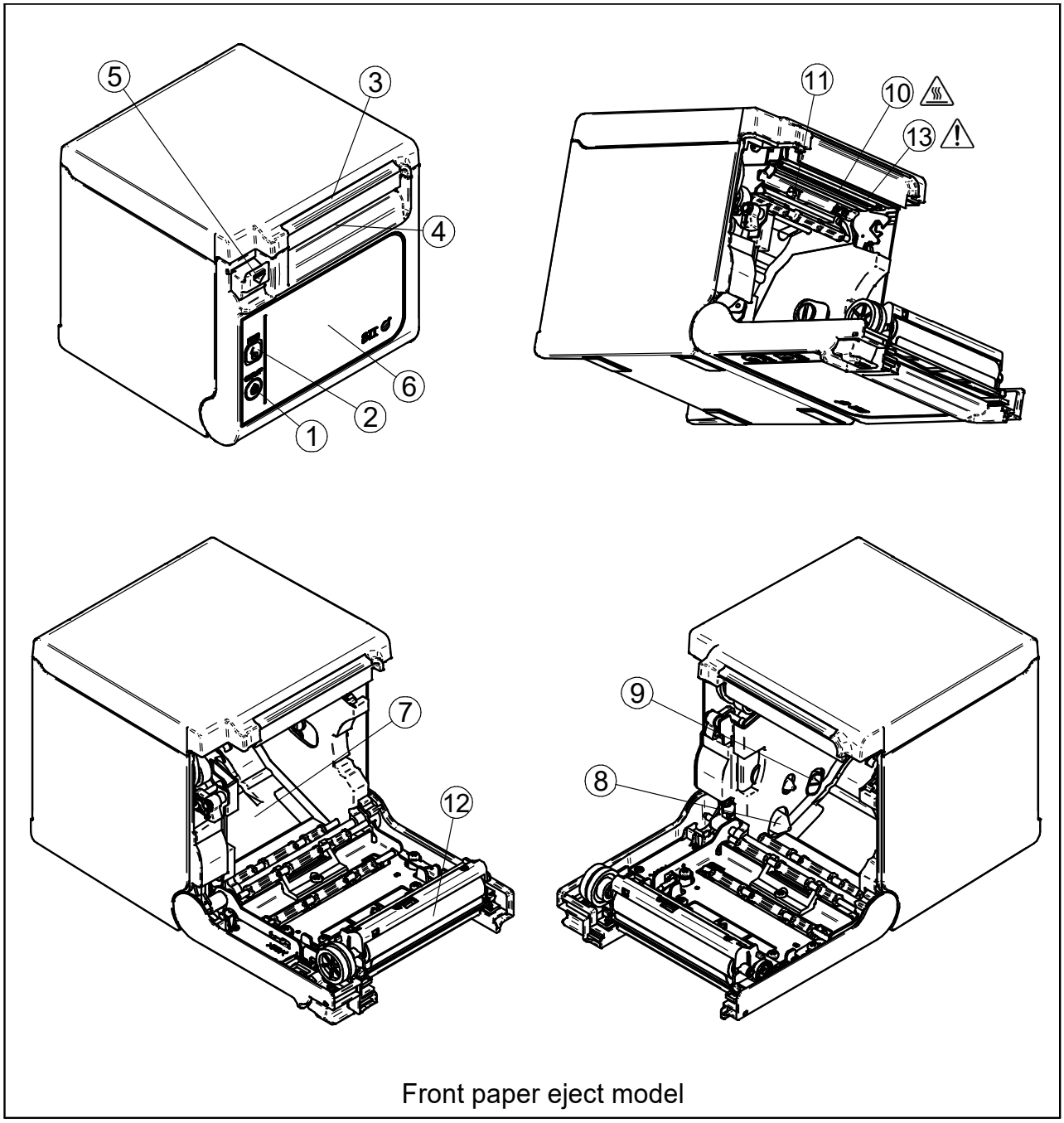

Front paper eject model

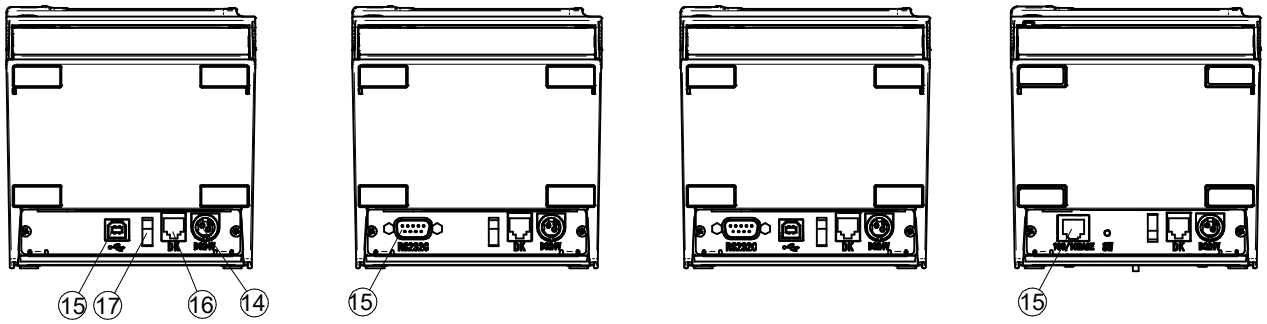

USB model | Serial model | USB + Serial model | Ethernet model

1 POWER Switch

The POWER Switch turns on or off the printer. The LED lights when turning on the printer. To turn the off the printer, hold down the switch for longer than 3 seconds.

2 FEED Switch

The FEED Switch operates paper feed. When holding down the switch for a few seconds, the printer feeds the thermal paper continuously for the period of held.

3 LED

The LED lights when turning on the printer. See "LED Display" on the next page for details.

4 Paper outlet

Thermal paper is ejected from here. The cutter is attached.

5 Release lever

The lever is used to open the paper cover to set the thermal paper. It is also used to open the paper cover when a paper jam occurs.

6 Paper cover

The platen is released from the thermal paper when opening this cover. Open this cover to replace the thermal paper or to clean the thermal head.

7 Paper holder

The paper holder holds the thermal paper.

8 Paper-near-end sensor

The paper-near-end sensor detects remaining paper amount to replace the thermal paper.

9 Paper-near-end sensor setting lever

The lever sets the value to detect the remaining amount of the thermal paper.

10 Thermal head ⚠

The thermal head prints data on the thermal paper. DO NOT touch the thermal head immediately after printing because it may get hot.

11 Paper sensor

The sensor detects thermal paper presence.

12 Platen

The platen brings the thermal paper into contact with the thermal head. The platen is turned to feed the paper.

13 Cutter ⚠

The cutter cuts the thermal paper automatically after printing. Avoid touching the exposed blade while the printer cover is open.

14 Power connector

The AC adapter is connected here.

15 Interface connector

The interface cable is connected here.

16 Drawer kick connector

The connector is for connecting the drawer.
Do not connect a phone line.

17 Wire clip

The communication cable can be fixed to prevent it from being unplugged.

■ LED Display

Printer Status	LED (Color)	LED (Lighting Pattern)
Power off	-	Off
Power on (print-ready)	Blue*1	On*1
Printing	Green	On
Waiting for test print*2	Green	Blink-2
Paper-near-end*3	Blue	Blink-1
Output buffer full	Green	Blink-1
Out-of-paper error	Yellow	Blink-1
Cover open error	Yellow	On
Hardware error	Red	On
Head temperature error	Violet	On
Voltage error	Violet	Blink-1
Cutter error	Violet	Blink-2
Rewriting external flash	White	Blink-3
Rewriting FW	White	On

*1: Default value
*2: Valid for Ethernet with firmware version 1.12 or higher.
*3: When MS5-5 (Paper-Near-End Sensor Selection) is enabled, the LED (Color) and LED (Lighting pattern) are the same as the one for out-of-paper error.

■ Blink Pattern

Status	Pattern
Blink-1	
Blink-2	
Blink-3	

7. POWER CONNECTION

The printer can be powered with an AC adapter.
Be sure to see "18. SPECIFICATIONS" for the AC adapter.
The AC adapter and the AC cable are optional accessories. See "18 SPECIFICATIONS" and "19 ACCESSORIES AND CONSUMABLE PARTS", and be sure to purchase our specified products listed on these references.

■ Connecting the AC Adapter

(1) Connect the AC cable to the AC adapter.

(2) Connect the DC plug of the AC adapter to the power connector of the printer.

(3) Connect the AC plug of the AC cable to an outlet.

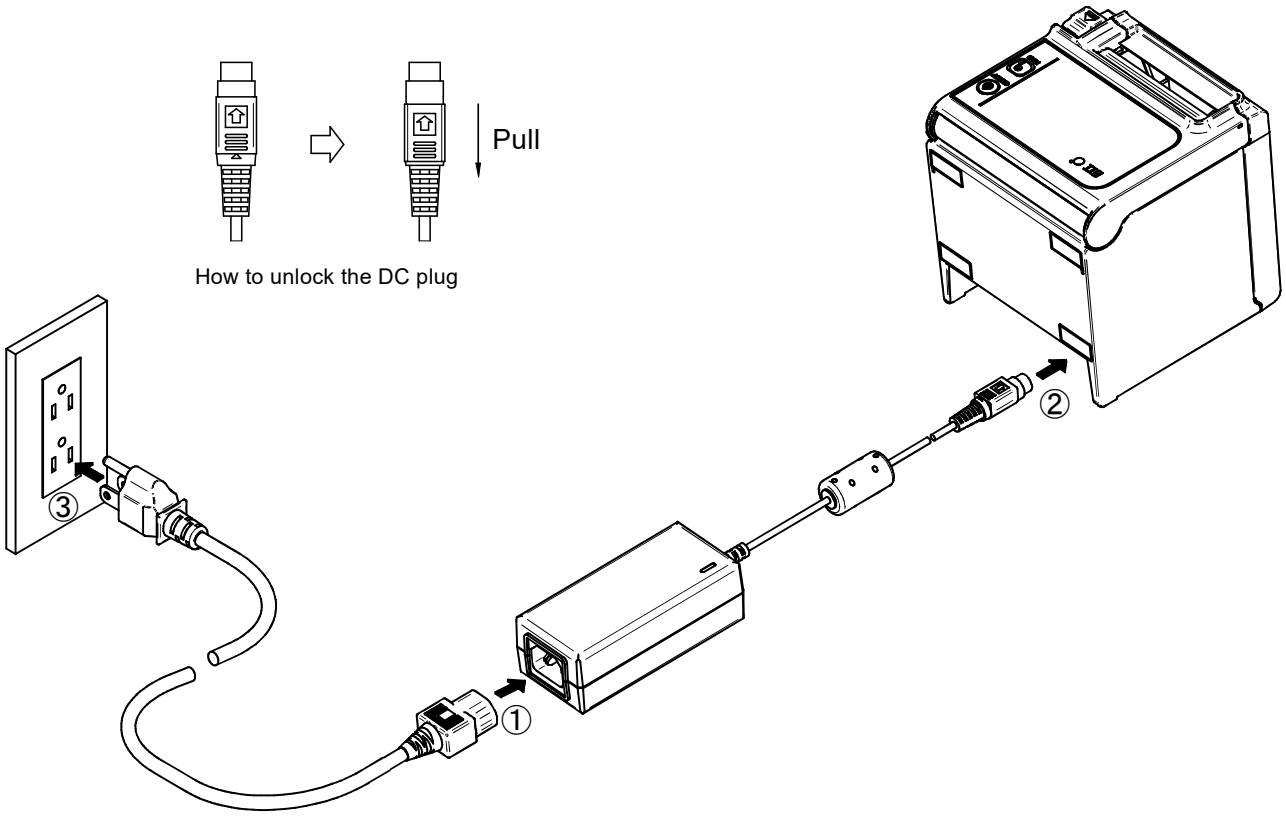

NOTE

- Insert the DC plug into the power connector on the printer correctly.
  When insert the DC plug forcibly in wrong direction, it may cause damage.
- The DC plug of the printer power connector has the locking system.
  Pull the DC plug to the opposite direction of the arrow shown in the front side of the DC plug to unlock.
  Unlock the DC plug as shown in the figure before disconnecting it.
- Turn off the printer before installing or removing the AC adapter.
- When the printer is not used for a long time, unplug the AC cable from the outlet.

8. THERMAL PAPER SETTING

The printer uses the thermal paper roll (hereinafter referred to as the thermal paper). The function settings of the printer differ depending on the used thermal paper. See "12 FUNCTION SETTINGS" for details.

■ Thermal Paper Setting

(1) Operate the release lever to the direction of the arrow shown in the figure below to open the paper cover.

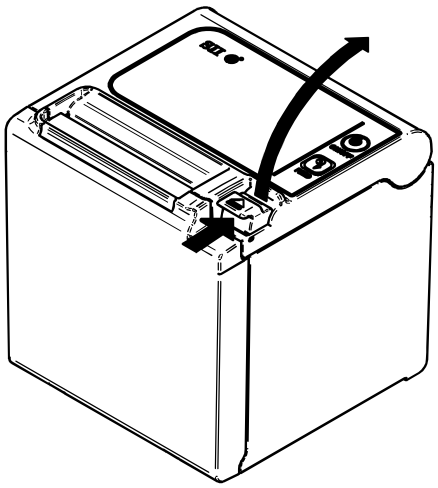

Top paper eject model

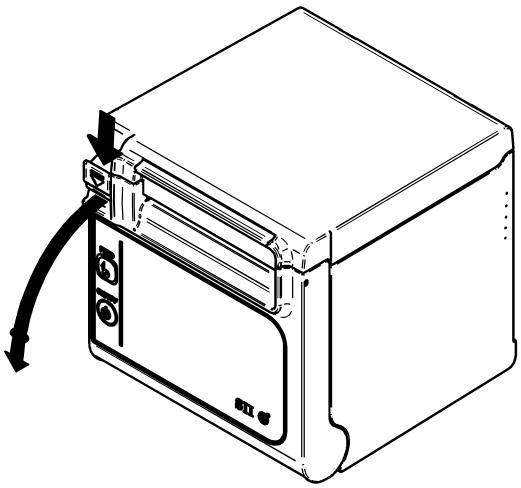

Front paper eject model

(2) Take the glued end from the paper roll.

(3) Set the thermal paper from directly above to the paper holder. At the time, set the thermal paper direction as shown in the figure below.

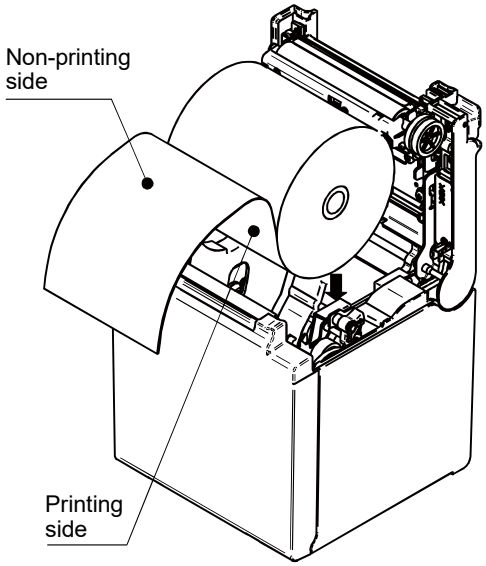

Top paper eject model

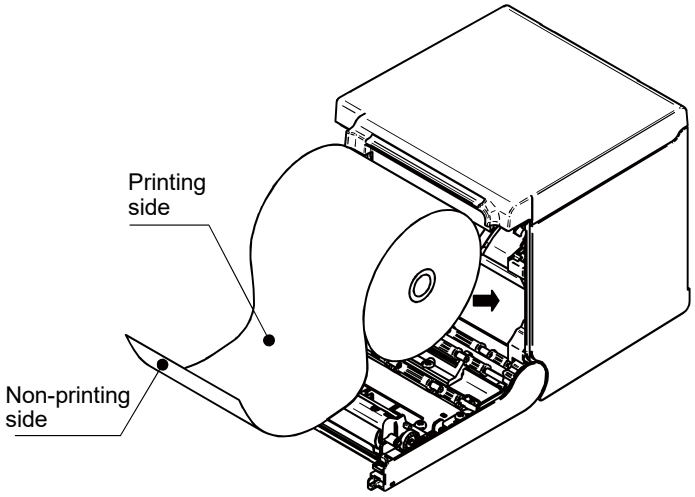

Front paper eject model

NOTE

◆ Be careful not to cut your fingers by the cutter blade.

(4) Pull the thermal paper straight and then push the center of paper cover certainly to close it, to avoid one side lock defect.

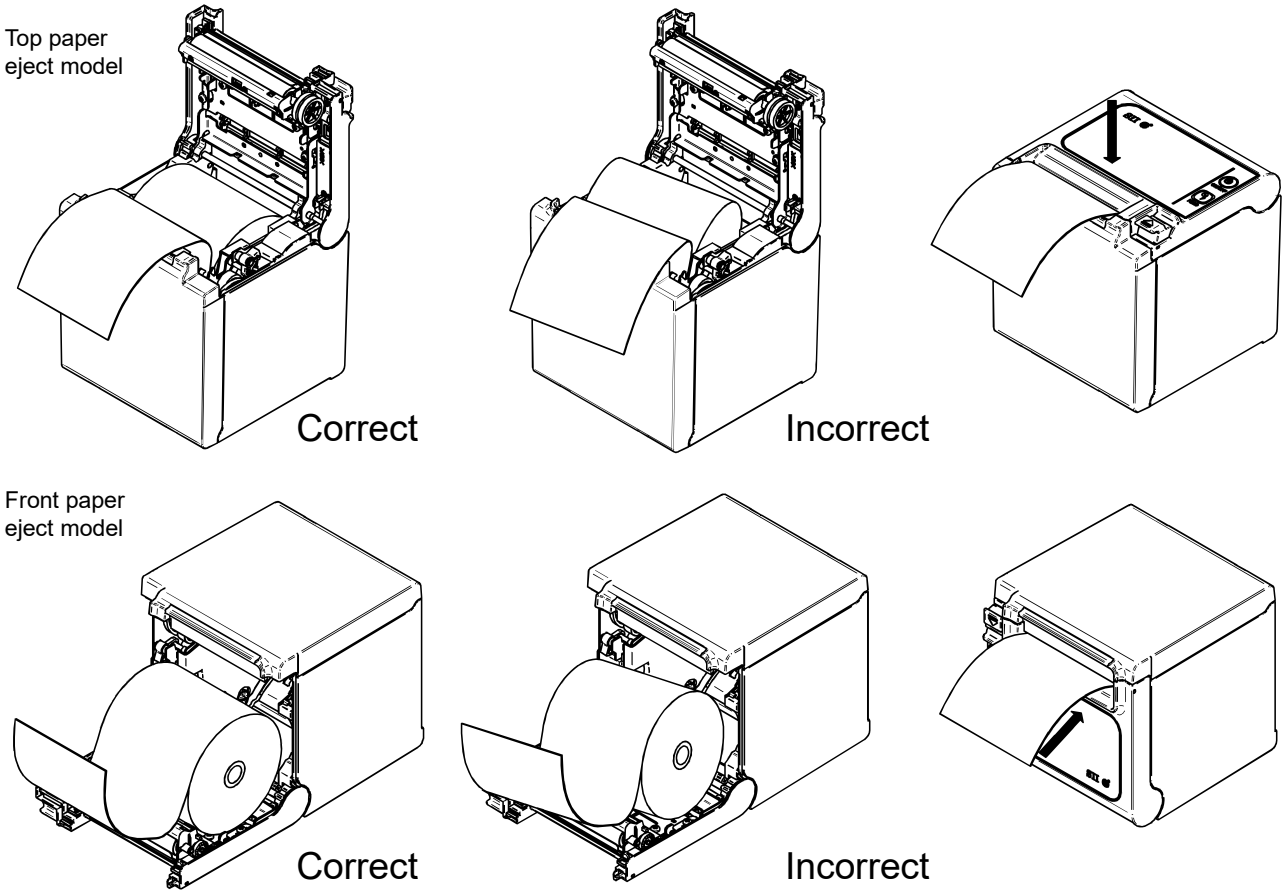

NOTE

- Pull the thermal paper straight.
- Push the paper cover certainly to avoid one side lock defect.

(5) After closing the paper cover, paper feed and paper cutting are performed automatically.

NOTE

- Be sure to operate the release lever to the end. If not, the paper cover may not open.
- DO NOT cover the paper outlet or hold down the thermal paper. Doing so may cause paper jam.
- DO NOT touch the platen and gears in the printer. Doing so may cause loss of printing quality or damage.
- Use the thermal paper whose roll core has 12 mm inside diameter and 18 mm outside diameter. Moreover, DO NOT use the thermal paper with glued or taped end.

HINT

- Leaving the printer with the thermal paper for a long time may cause a paper-feeding problem because the surface of the thermal paper sticks to the thermal head due to the environmental changes. In that case, open the paper cover to separate the thermal paper from the thermal head, and then close the paper cover before use.

■ Thermal Paper Shape

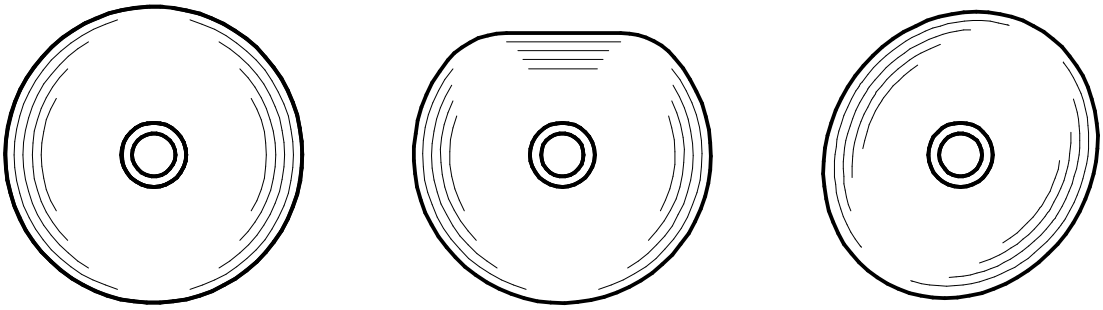

Correct Incorrect Incorrect

NOTE

◆ DO NOT use deformed thermal paper. Doing so may damage the printer.

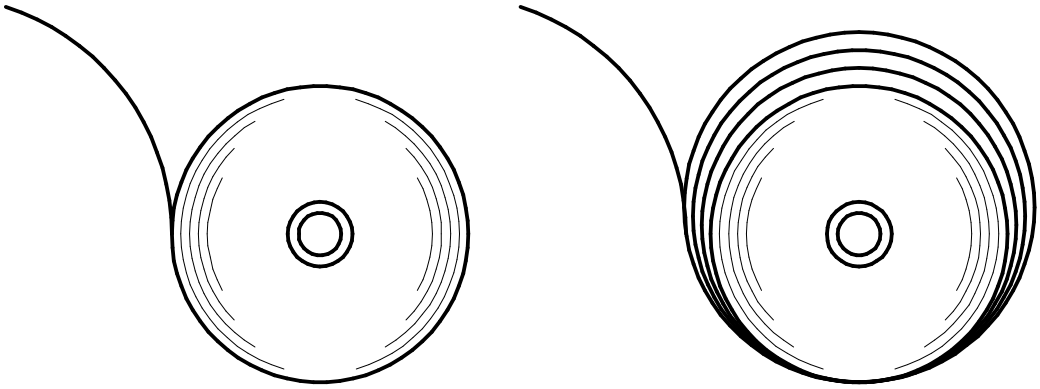

Correct Incorrect

NOTE

◆ In case of using loosened thermal paper roll, rewind the roll before using it.

9. ADJUSTMENT OF REMAINING THERMAL PAPER

The printer detects remaining amount of the thermal paper by the paper-near-end sensor.
Detecting the paper-near-end requires the replacement of the thermal paper with new one.

■ Removing Remaining Thermal Paper

(1) Operate the release lever to open the paper cover.

(2) Remove the thermal paper from the paper holder.

■ Adjustment of Paper-near-end Sensor

The detection value of paper-near-end can be changed according to the following procedure.
Set the paper-near-end sensor in accordance with the location of the printer.
The detection value is set to approx. 22 ±2 mm in diameter at the shipping (Position A for Top paper eject models, Position C for Front paper eject models).

NOTE

◆ Use the detection value of paper-near-end as reference.

(1) Turn the power off, and then unplug the DC plug.

NOTE

◆ Do not touch the printer when unplugging the DC plug.

(2) Move the paper-near-end sensor to the position of A to D while pressing the paper-near-end sensor in the arrow direction in the figure below. Be sure to move the paper-near-end sensor to the correct position until it clicks.

NOTE

◆ Be sure to use a paper roll whose core has 12 mm inside diameter and 18 mm outside diameter. Otherwise, the paper-near-end detection will not work appropriately.

[Top paper eject model]

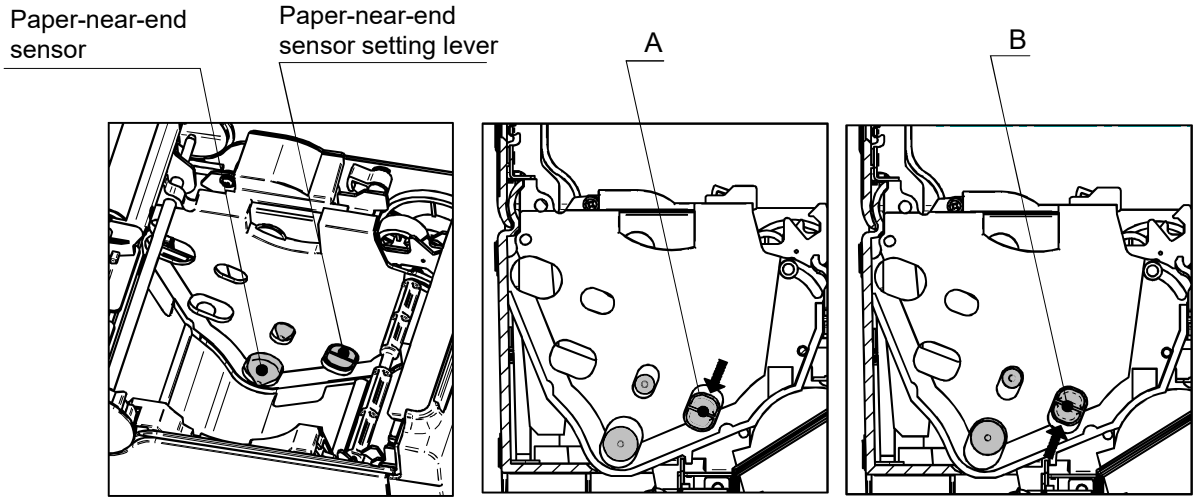

[Front paper eject model]

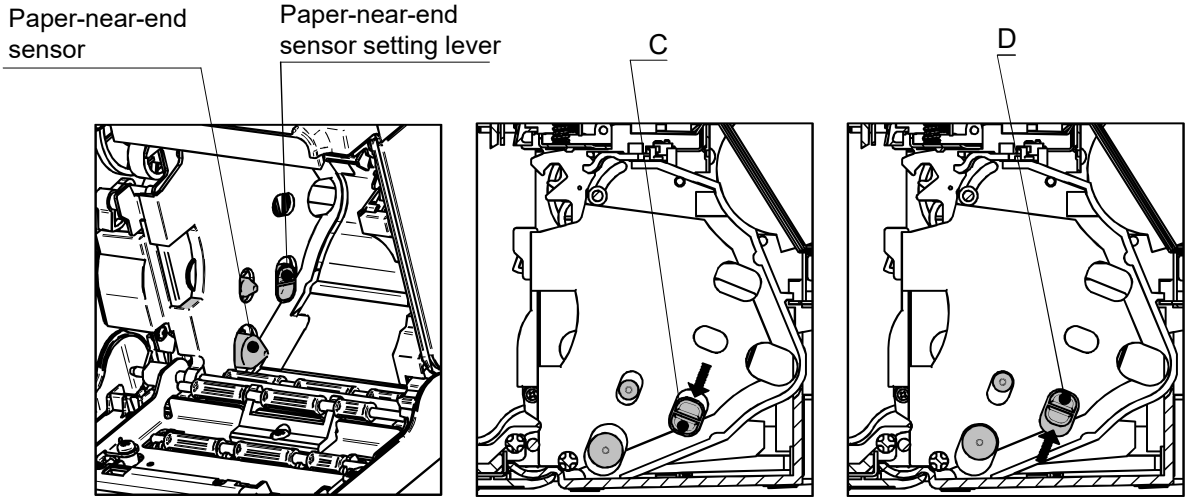

Paper-near-end Sensor Position	Outside Diameter for Paper-near-end Detection
A	ϕ 22 ±2 mm in diameter (Top paper eject model)
B	ϕ 25 ±2 mm in diameter (Top paper eject model)
C	ϕ 22 ±2 mm in diameter (Front paper eject model) *
D	ϕ 25 ±2 mm in diameter (Front paper eject model)*

*: Outside diameter for paper-near-end detection is not affected by the installed Wall Mounting Kit (WLK-B01-1).

10. PREVENTION AND TREATMENT OF PAPER JAM

Do not touch the thermal paper while the paper is being ejected or before it is cut. Covering the paper outlet or pulling out the paper during paper ejection may cause a paper jam, cut failure, or line feed failure. Never open the paper cover during paper cutting.

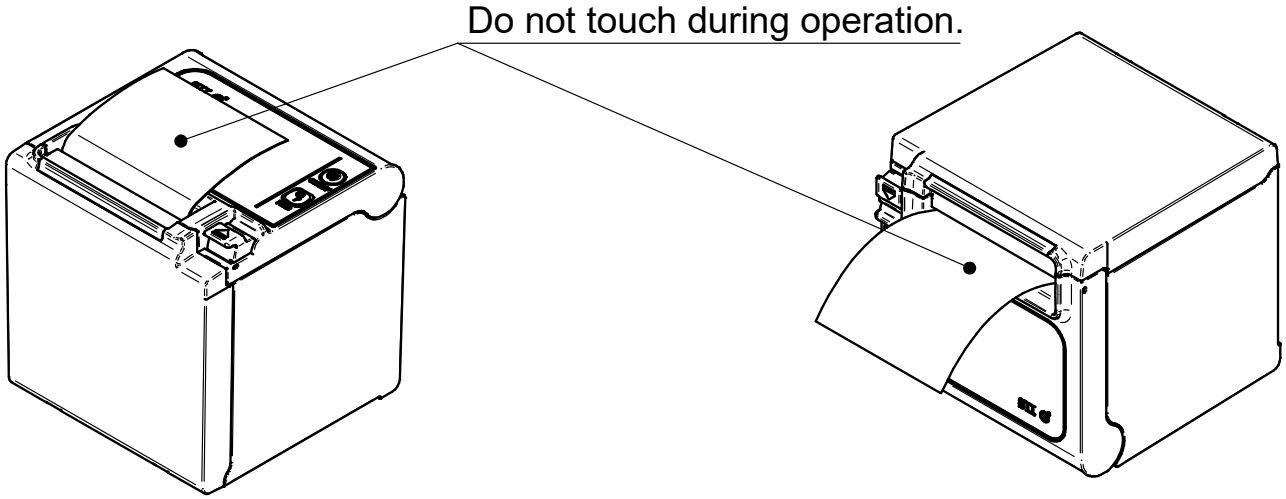

■ Removing Paper Jam

When a paper jam occurs, remove the thermal paper according to the following procedure.

(1) Turn off the printer.

(2) Operate the release lever to open the paper cover, and remove the paper jam.

NOTE

◆ Do not damage the printer when removing the thermal paper.
Especially, do not touch the thermal head because it is easy to break.

(3) Set the thermal paper straight and then close the paper cover gently.

(4) Turn on the printer.

(5) When the printer is recovered, the LED lights in blue.

NOTE

◆ DO NOT touch the thermal head immediately after printing because it may get hot.

■ Cutter Error Treatment

When the motor is locked during paper cutting due to a cutter error and the paper cover does not open, recover the printer according to the following procedure:

(1) Turn off the printer.

NOTE

◆ Be sure to turn off the printer before handling a cutter error.

(2) Operate the release lever repeatedly to return the cutter blade to the home position. Then, the paper cover can be opened. When there is a paper jam, remove it.

(3) Set the thermal paper straight and then close the paper cover gently.

(4) Turn on the printer.

(5) When the printer is recovered, the LED lights in blue.

NOTE

◆ DO NOT use such as ballpoint pens, drivers and cutter knives to remove a paper jam.
And be careful not to damage the printer.
Especially, do not touch the thermal head because it is easy to break.

◆ Be careful not to cut your fingers or be injured by the cutter.

◆ DO NOT apply excessive force on the cutter blade.

11. TEST PRINT

The printer can perform a test print.
In the test print, the firmware version, setting value of function settings, etc. are printed.

(1) Install thermal paper in the printer as instructed in "8 THERMAL PAPER SETTING".
Ensure that no error occurs, and then turn off the printer.

(2) Press the POWER Switch while holding down the FEED Switch. Release the POWER Switch.
When the test print is started, release the FEED switch.

(3) After the test print, the printer cuts the paper and returns to the print-ready status.

```
RP series Interface
RP-E10 [ Ver X.XX ]
  DD.MMM.YYYY
Copyright(C):SII

* MS1 *
3)  Mark Mode:Disable
4-5)Standby LED:Blue
6)  Near End Sensor:Enable
7)  Auto Activation by AC:Enable
8)  Power SW:Enable

* MS2 *
1-2)Buzzer Count:None
3-4)Buzzer Pattern:Pattern1
5)  Buzzer Volume:Loud

* MS3 *
1-2)Buzzer Count:None
3-4)Buzzer Pattern:Pattern1
5)  Buzzer Volume:Loud

* MS4 *
1-2)Division Method:288[dots]
3)  Head Drive:Dynamic
4)  Paper Width:80mm
5)  Effective Dots:576/432[dots]
7-8)Print Speed:High

* MS5 *
1)  Auto Status Back:Enable
2)  Init.Response:Enable
3)  Error Through:Enable
4)  Response Data Discarding:Disable
5)  Near End Error:Disable
6-7)Paper Set Handle:Standard
8)  Cutting Method:Full

* MS6 *
1-8)Print Density:100%

* MS7 *
1-8)Thermal Paper:KT 48 FA

* MS13 *
1)  Kanji Code:JIS Code
2)  Reverse Function:Disable

* Communication Type *
 USB Communication
 Control Model:RP-E10
 USB Device Class:Printer

* Font Information *
 JIS X 0208-1997 Font Exist
 Gaiji Font enable
 Down-load Font enable
 Character Code Table:Code Page437
 International Character:USA

* Serial Number Information *
 XXXXXXXXXX
```

12. FUNCTION SETTINGS

Various functions, such as the communication method after the power on and the type of thermal paper, can be preset to this printer. Set these functions before using the printer.

The function settings of the printer are stored in the FLASH memory. They are effective until rewriting them again. These functions can be set by using the Memory Switch (hereinafter referred to as MS) MS1 to MS7 and MS13.

See "RP-E10 SERIES THERMAL PRINTER TECHNICAL REFERENCE" for details.

HINT

- The memory switch can also be set from software. Download software from the download page listed on the rear cover.
  The following software can be set.
  - ・For Windows: "SII Printer Setting Utility" included in "SII POS Printer Software for Windows"
  - ・For iOS and Android: App "SII Printer Utility" provided by App Store or Google Play

13. CONNECTING TO THE HOST DEVICE

There are 4 models in the printer: serial, USB, USB + Serial and Ethernet. The Function Settings of the printer differs depending on the communication method to be used. See "RP-E10 SERIES THERMAL PRINTER TECHNICAL REFERENCE" for details.

An interface cable is required separately for the serial communication, USB communication or Ethernet communication. See "18 SPECIFICATIONS" for details of interface specifications.

The communication speed might be reduced depending on data processing by software or print contents.

■ Serial/USB/Ethernet Communication

(1) Turn off the printer.

(2) Connect the interface cable to use to the interface connector on the back side of the printer. (When connecting a USB cable, lock the cable with the wire clip as shown in the figure below.)

(3) Turn on the printer and send data from the host device to the printer.

(4) Verify that the data is printed correctly.

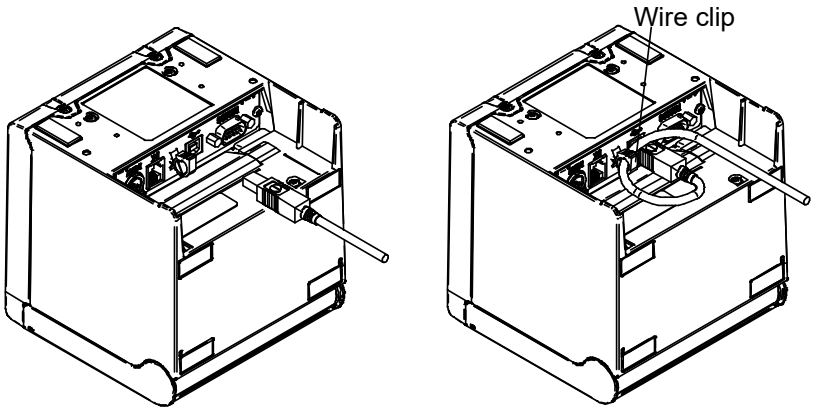

USB interface cable and Locking of USB cable

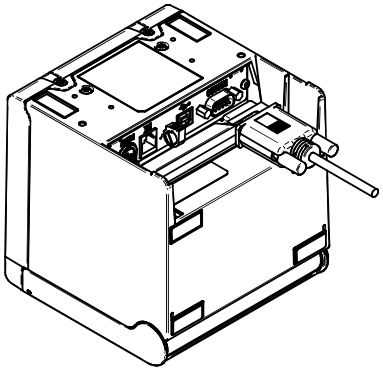

Serial interface cable

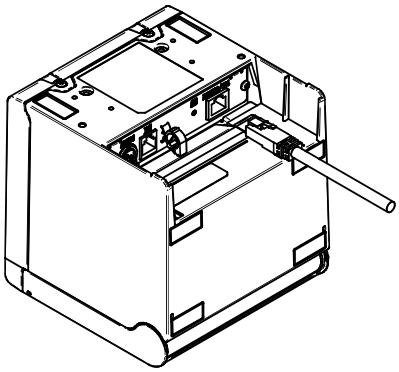

Ethernet interface cable

NOTE

- When connecting an interface cable to the interface connector, push it until it clicks.
- NEVER connect plugs of other cables including drawer kick cable or phone line to the interface connector.
- When connecting an outdoor aerial-wired LAN cable, be sure to use it through another anti-serge device. Otherwise, the device may be damaged by induced lightning.

■ Connecting to the Drawer

(1) Turn off the printer.

(2) Connect the plug of drawer kick cable to the drawer kick connector on the back side of the printer.

(3) Turn on the printer.

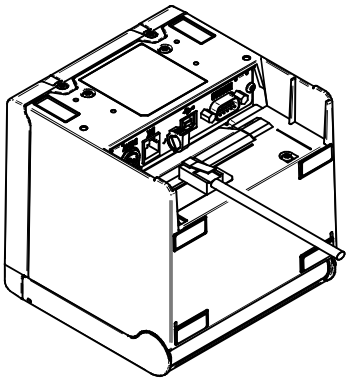

NOTE

- ◆ When connecting or disconnecting the drawer kick cable, hold the plug and never pull the cable.
- ◆ DO NOT connect other cables than a drawer kick cable to the drawer kick connector, such as phone line.
- ◆ NEVER connect a USB cable to the drawer kick connector.

14. SETTINGS WHEN USING 58mm PAPER WIDTH

(1) Turn off the printer.

(2) Operate the release lever to open the paper cover.

(3) Set the attached partition plate and the spacer plate to the position as shown in the figure below.

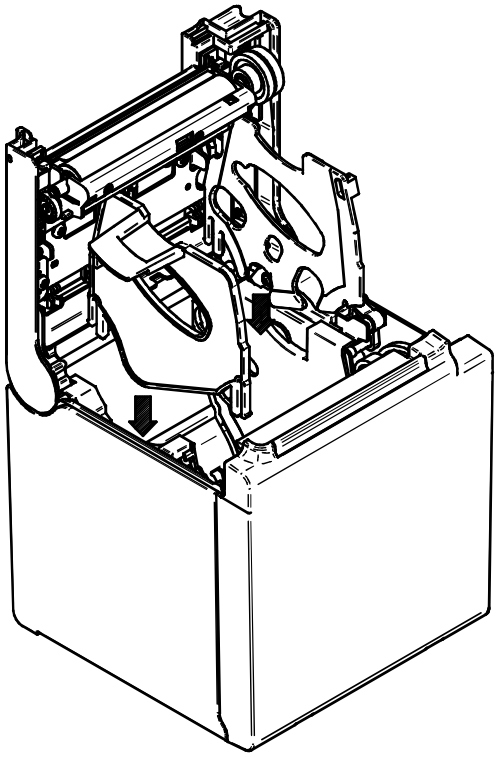

See "RP-E10 SERIES THERMAL PRINTER TECHNICAL REFERENCE" to set the MS4-4 (Paper Width Selection) to 58mm.

NOTE

- Set the paper width before using the printer for the first time. Do not change the paper width after starting to use the printer. Doing so may damage the printer.
- When the 58 mm width thermal paper is used, rubber crumbs of the platen may be generated because the platen contacts with the thermal head. Remove rubber crumbs regularly to maintain printing quality.

15. INSTALLATION OF ACCESSORIES

■ Wall Mounting Kit (WLK-B01-1)

The Wall Mounting Kit is exclusive for the Front paper eject model. It cannot be used for the Top paper eject model.

(1) Preparation

Make sure that the product and its accessories are contained.

Printer attachment screw
(4 pieces)
(Tapping screw 3×6)

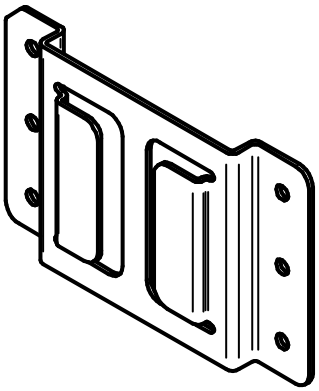

Wall hanging bracket

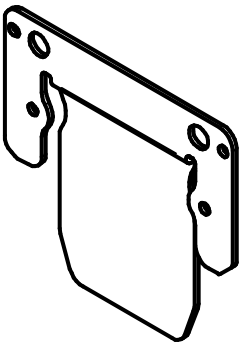

Printer bracket

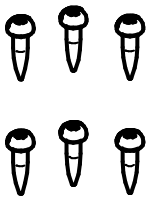

Wall hanging bracket
attachment screw (6 pieces)
(Tapping screw 3.8×18)

(2) Installation of Printer Bracket

Firmly attach the printer bracket with 4 printer attachment screws as shown in the figure below.
The tightening torque should be 39.2 cN•m (4 kgf•cm).

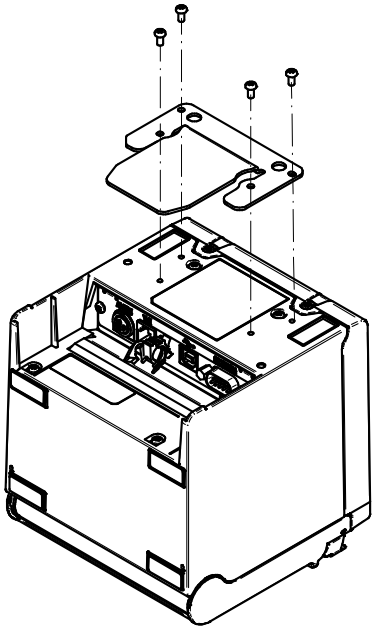

NOTE

- Turn off the printer before the operation.
- Remove the AC cable of the AC adapter and the interface cable.

(3) Installation of Wall Hanging Bracket

Fix the wall hanging bracket to the mounting surface, and then secure it with 6 wall hanging bracket attachment screws. WLK-B01-1 is designed to be installed on a wall.
After installation, make sure that the wall hanging bracket is fixed on the wall securely without rattle.

NOTE

- The accompanying wall hanging bracket attachment screws are for installing to wood materials. Do not use them for other materials.

(4) Installation of the Printer

Slide the printer into the wall hanging bracket from the top to the bottom to insert the printer bracket into the wall hanging bracket, as shown in the figure below.

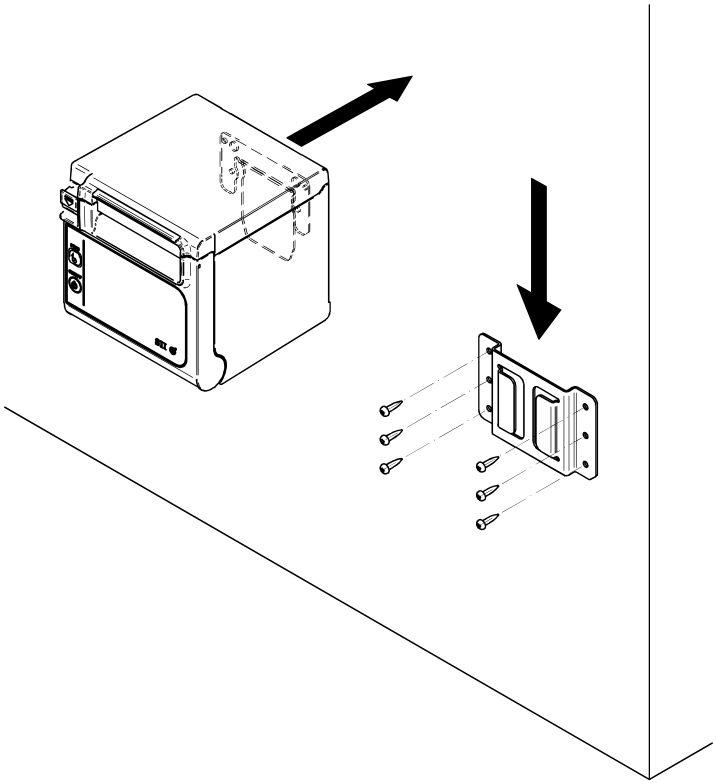

NOTE

◆ Check the place and the material/structure of the wall, and then install the printer securely. Injury or destruction of property might occur by dropping off.

■ Back Plate (BCP-A01-K (Black), BCP-A01-W (White))

The Back Plate is exclusive for the Front paper eject model. It cannot be used for the Top paper eject model.

(1) Preparation

Make sure that the back plate and its accessories are contained.

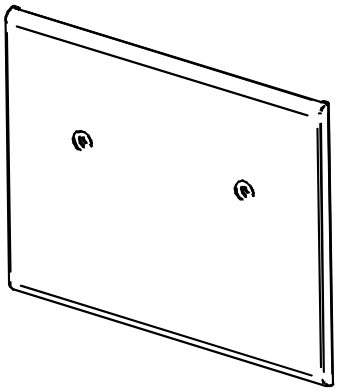

Back plate

Back plate attachment screw
(2 pieces)
(Tapping screw 3×6)

(2) Installation of the cables

Before installing the back plate, connect the DC plug of the AC adapter and the interface cable to the printer.

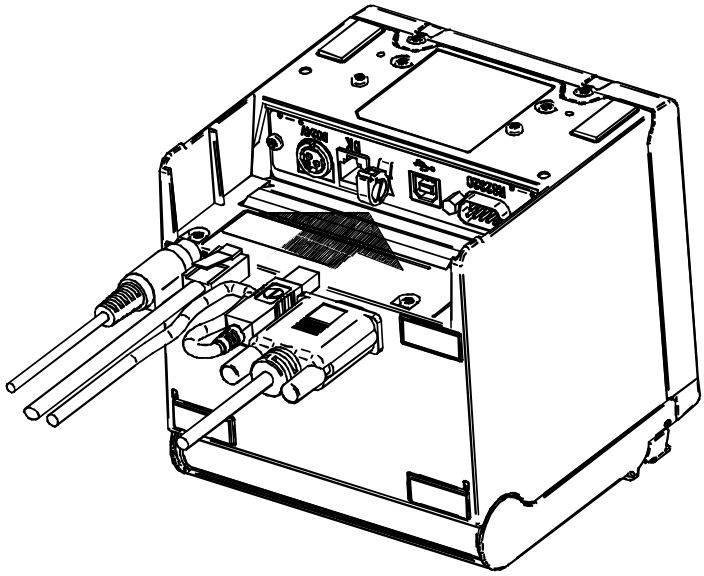

NOTE

- ◆ Turn off the printer before the operation.
- ◆ Perform the operation after removing the AC cable of the AC adapter.

(3) Installation of the back plate

Put the projections which are located at the back of the back plate into the hole of the back side of the printer, and then firmly attach the back plate with 2 printer attachment screws as shown in the figure below.
The tightening torque should be 39.2 cN•m (4 kgf•cm).

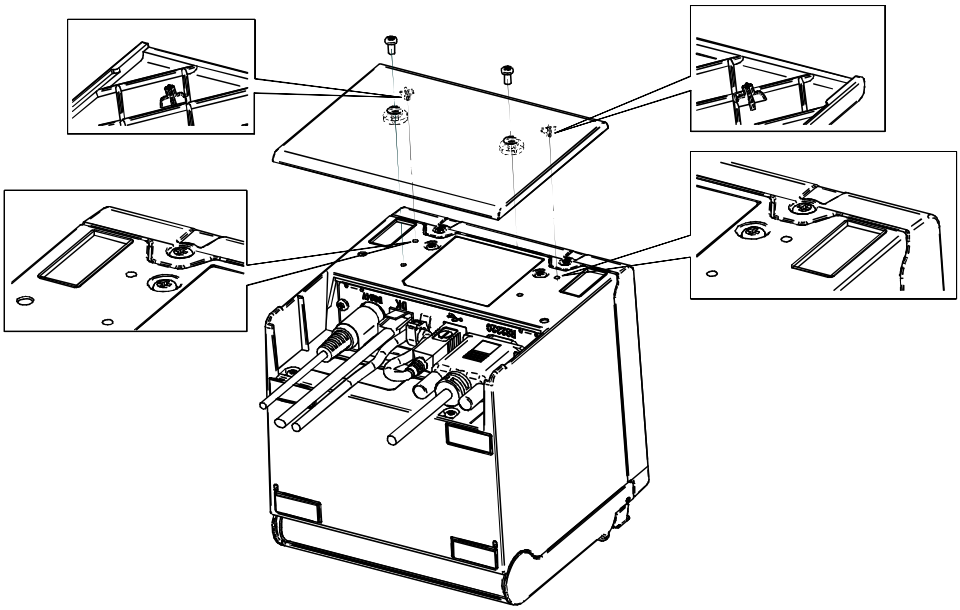

16. PRINTER MAINTENANCE

The thermal head of the printer does not require user maintenance.
When paper powder accumulates, cleaning the thermal head can maintain the printing quality for an extended period of time.

■ Cleaning Thermal Head/Platen/Rubber Feet (Front Paper Eject Model)

(1) Turn off the printer.

(2) Unplug the AC plug of the AC cable from the outlet.

(3) Open the paper cover.

(4) Clean the thermal head, the platen and/or the rubber feet with a cotton swab with a small amount of ethyl alcohol.

(5) Wait until any ethyl alcohol remaining on the thermal head and the platen dries out completely, and then close the paper cover.

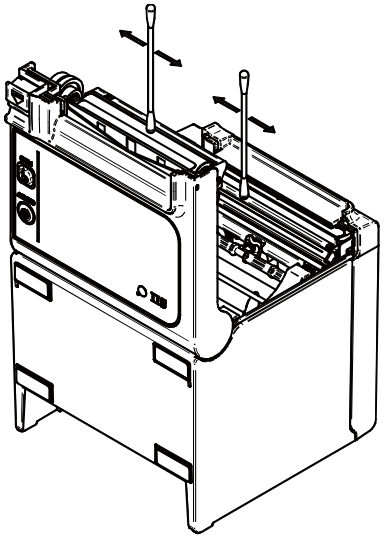

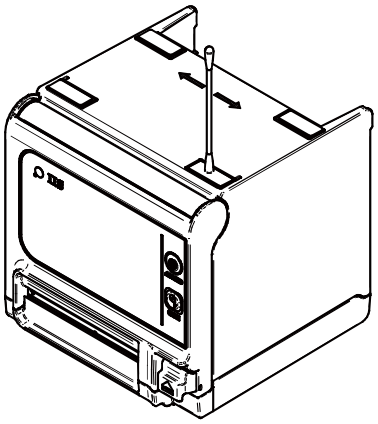

NOTE

- ◆ Clean the thermal head after it cools down.
- ◆ Be sure to wipe the thermal head with a cotton swab or other soft material.
- ◆ DO NOT touch the gear of the platen. Doing so may cause loss of printing quality or a failure.
- ◆ The rubber feet have the special adsorption structure. They lose adsorption force as dust or dirt adheres. However, it can be recovered by cleaning.

17. TROUBLESHOOTING

Check the following points before requesting for repair:

■ The power does not turn on

- Is specified AC adapter being used?
- Are the AC cable and the AC adapter connected correctly?
- Are the AC adapter and the printer connected correctly?

■ The printer does not print

- Is the interface cable connected correctly?
- Are the specifications of interface cable conformed to its specifications of this manual being used?
- Is the communication condition between the printer and the host device correct?
- Is specified thermal paper being used? Is the paper orientation (surface/back) correct?

■ An error is displayed

- See "LED Display" on page 14.
- Are the function settings of the printer correct?

18. SPECIFICATIONS

■ Printer Specifications

Item	Specifications
Model	RP-E10, RP-E11
Printing method	Thermal printing
Number of characters per line *1	Paper width 80 mm: 24 dots × 12 dots 48 digits (42 digits*2) 16 dots × 8 dots 72 digits (64 digits*2) Paper width 58 mm: 24 dots × 12 dots 36 digits (30 digits*2) 16 dots × 8 dots 54 digits (45 digits*2)
Character size (H × W)	1-byte: H24 dots × W12 dots, H16 dots × W8 dots 2-byte: H24 dots × W24 dots, H16 dots × W16 dots
Number of effective dots	Paper width 80 mm: 576 dots (512 dots*2) Paper width 58 mm: 432 dots (360 dots*2)
Dot density	8 dots/mm
Paper width / Printing width	80 mm / 72 mm (80 mm / 64 mm*2) 58 mm / 54 mm (58 mm / 45 mm*2)
Printing speed max.	350 mm/s.
Paper cutting method	Slide cutting method
Paper cutting type	Full cut, Partial cut (tab left at the center)
Operating temperature	5°C to 45°C (41°F to 113°F)
Relative humidity*3	10%RH to 90%RH
Dimensions (W × D × H)	129 mm × 129 mm × 129 mm*4
Mass	Approx. 1.3 kg (excluding the thermal paper)
Input voltage	DC24.0 V ±5%

*1 The number for 1-byte character, character spacing is 0 dots.
*2: When selecting 512/360 dots by MS4-5
*3: See "RP-E10 SERIES THERMAL PRINTER TECHNICAL REFERENCE" for the allowable humidity range at each temperature.
*4: Excluding projections

■ AC Adapter Specifications (Specified accessories)

Item	Specifications
Model	PW-E2427-W1
Input voltage	AC100 to 240 V, 50/60 Hz
Rated output	DC24.0 V, 2.71 A
Dimensions (W × D × H)	53 mm × 114 mm × 37 mm*
Mass	Approx. 330 g

*: Excluding the cable

(Specified accessories)

Item	Specifications
Model	PW-E2427-W2
Input voltage	AC100 to 240 V, 50/60 Hz
Rated output	DC24.0 V, 2.71 A
Dimensions (W × D × H)	53 mm × 114 mm × 37 mm*
Mass	Approx. 330 g

*: Excluding the cable

■ Interface Specifications

Serial interface specifications

Item	Specifications
Synchronous	Asynchronous
Baud rate	9600, 19200, 38400, 115200 bps
Data length*	7 or 8 bits
Parity	None, Even or Odd
Data control	Hardware control, Xon/Xoff

*: Only 8 bits for the USB + Serial model.

USB interface specifications

Item	Specifications
Version	Ver. 2.0 conformity
Printer data transmission mode	Bulk transfer (12 Mbps)

Ethernet interface specifications

Item	Specifications
Communication standard	10Base-T, 100Base-TX

■ Sale Destinations

Sale destinations of the printer and specified accessories are listed below.

Country/Region*1	RP-E10 RP-E11	AC Adapter	AC Cable
Japan	✓	PW-E2427-W1 PW-E2427-W2	CB-JP07-20A CB-JP08-20A
EC EFTA Turkey	✓	PW-E2427-W2	CB-CE04-20A CB-CE05-20A
UK	✓		CB-UK03-20A CB-UK04-20A
USA Canada	✓		CB-US05-20A CB-US06-20A
Brazil	✓		*2

*1: Ask your SII sales representative when you want to operate the products in other countries/regions than listed above.
*2: Use the AC cable of 2.0 meters long that complies with safety standards in Brazil.

19. ACCESSORIES AND CONSUMABLE PARTS

■ Specified Accessories

Name	Model
AC adapter	PW-E2427-W1 PW-E2427-W2
AC cable*	CB-JP07-20A, CB-JP08-20A CB-US05-20A, CB-US06-20A CB-CE04-20A, CB-CE05-20A CB-UK03-20A, CB-UK04-20A
Wall mounting kit	WLK-B01-1
Back plate (Black) Back plate (White)	BCP-A01-K BCP-A01-W
USB cable Serial cable Powered USB cable	IFC-U02-2 IFC-S02-2 IFC-V01-1

*: The shape of the power outlet differs in countries. Confirm it before using.

■ Specified Thermal Paper

Model	Manufacturer
TF60KS-E	Nippon Paper
PD160R-N	Oji Paper
F220VP	Mitsubishi Paper Mills
P220VBB-1	Mitsubishi Paper Mills
F5041	Mitsubishi HiTec Paper
KT48FA	Papierfabrik August Koehler

When using thermal paper that is not specified, the printing quality or specified life of the thermal head would not be guaranteed.

Seiko Instruments Inc.
563, Takatsukashinden, Matsudo-shi,
Chiba 270-2222, Japan
Print System Division
Tel: +81-47-709-0925
Fax: +81-47-709-1793

Seiko Instruments U.S.A., Inc.
Thermal Printer Div.
21221 S. Western Avenue, Suite 250, Torrance, CA 90501, U.S.A.
Tel: +1-800-688-0817 Fax: +1-310-517-7779

Seiko Instruments GmbH (Economic operator)
Siemensstrasse 9, D-63263 Neu-Isenburg, Germany
Tel: +49-6102-297-0 Fax: +49-6102-297-50100
info@seiko-instruments.de

Seiko Instruments Trading (H.K.) Ltd.
7/F, Ying Tung Industrial Building, 802 Lai Chi Kok Road, Kowloon, Hong Kong
Tel: +852-2494-5160 Fax: +852-2424-0901

Seiko U.K. Limited (Authorized Representative in the United Kingdom)
SC House, Vanwall Road, Maidenhead, Berkshire, SL6 4UW

Download page: https://www.sii.co.jp/sps/eg/download/index.html

(Specifications are subject to change without notice.)