SII

USER'S GUIDE

Thermal Printer

SLP720RT SERIES

Read this USER'S GUIDE carefully before using the printer.
Keep this USER'S GUIDE in a place where it can be accessed quickly.

Seiko Instruments Inc.

Rev.01 May 2022
Rev.02 June 2022
Rev.03 October 2022
Rev.04 December 2022
Rev.05 January 2023
Rev.06 July 2024
Rev.07 April 2025
Rev.08 July 2026

Copyright ©2022-2026 by Seiko Instruments Inc. All rights reserved.

The information contained herein is the property of SII and shall not be reproduced in whole or in part without prior written approval of SII.

SII reserves the right to make changes in the specifications and materials contained herein without notice and shall not be responsible for any damages (including consequential) caused by reliance on the materials presented, including but not limited to typographical, arithmetic, and listing errors.
This product is developed as a product for industrial equipment use.

SII is a trademark of Seiko Instruments Inc.
Android™ is a trademark of Google LLC.
IOS is a trademark or registered trademark of Cisco in the U.S. and other countries and is used under license.
All other trademarks are the properties of their respective companies.

Applicable EC Directive and Standards

Product: Thermal Printer SLP720RT (Model with WLAN) (with AC adapter PW-H2415-W1)

Directive:	Title
2014/53/EU	Radio Equipment Directive
2009/125/EC	Directive on Eco-Design of Energy-related Products
2011/65/EU (Commission Delegated Directive (EU) 2015/863)	Restriction of the use of certain hazardous substances (RoHS) Directive

Standards
- EN 301 489-1
- EN 301 489-17
- EN 300 328
- EN 62368-1
- EN IEC 63000
- EN 62311

Restrictions: Operations in 5150-5350 MHz band is for indoor use only.
This product is for use only with nominal voltage in each country.

Product: Thermal Printer SLP720RT (with AC adapter PW-H2415-W1)

Directive:	Title
2014/30/EU	EC Electromagnetic Compatibility Directive
2014/35/EU	EC Low Voltage Directive (with AC adapter only)
2009/125/EC	Directive on Eco-Design of Energy-related Products
2011/65/EU (Commission Delegated Directive (EU) 2015/863)	Restriction of the use of certain hazardous substances (RoHS) Directive

Standards
- EN 55032
- EN IEC 61000-3-2
- EN 61000-3-3
- EN 55035
- EN 62368-1
- EN IEC 63000

Product: AC adapter PW-H2415-W1

Directive:	Title
2014/30/EU	EC Electromagnetic Compatibility Directive
2014/35/EU	EC Low Voltage Directive
2009/125/EC	Directive on Eco-Design of Energy-related Products
2011/65/EU (Commission Delegated Directive (EU) 2015/863)	Restriction of the use of certain hazardous substances (RoHS) Directive

Standards
- EN 55032
- EN IEC 61000-3-2
- EN 61000-3-3
- EN 55035
- EN 62368-1
- EN IEC 63000

Applicable UK Directive and Standards

Product: Thermal Printer SLP720RT (Model with WLAN) (with AC adapter PW-H2415-W1)

Directive:
- Radio Equipment Regulations 2017
- The Ecodesign for Energy-Related Products and Energy Information (Amendment) (EU Exit) Regulations 2019
- The Restriction of the Use of Certain Hazardous Substances in Electrical and Electronic Equipment Regulations 2012

Standards
- BS EN 301 489-1
- BS EN 301 489-17
- BS EN 300 328
- BS EN 62368-1
- BS EN IEC 63000
- BS EN 62311

UK
CA

Restrictions: Operations in 5150-5350 MHz band is for indoor use only.
This product is for use only with nominal voltage in each country.

Product: Thermal Printer SLP720RT (with AC adapter PW-H2415-W1)

Directive:
- Electromagnetic Compatibility Regulations 2016
- Electrical Equipment (Safety) Regulations 2016
- The Ecodesign for Energy-Related Products and Energy Information (Amendment) (EU Exit) Regulations 2019
- The Restriction of the Use of Certain Hazardous Substances in Electrical and Electronic Equipment Regulations 2012

Standards
- BS EN 55032
- BS EN IEC 61000-3-2
- BS EN 61000-3-3
- BS EN 55035
- BS EN 62368-1
- BS EN IEC 63000

Product: AC adapter PW-H2415-W1

Directive:
- Radio Equipment Regulations 2017
- Electrical Equipment (Safety) Regulations 2016
- The Ecodesign for Energy-Related Products and Energy Information (Amendment) (EU Exit) Regulations 2019
- The Restriction of the Use of Certain Hazardous Substances in Electrical and Electronic Equipment Regulations 2012

Standards

BS EN 55032
BS EN IEC 61000-3-2
BS EN 61000-3-3
BS EN 55035
BS EN 62368-1
BS EN IEC 63000

FCC Compliance Statement

This equipment has been tested and found to comply with the limits for a Class B digital device, pursuant to Part 15 of the FCC Rules. These limits are designed to provide reasonable protection against harmful interference in a residential installation. This equipment generates, uses and can radiate radio frequency energy and, if not installed and used in accordance with the instructions, may cause harmful interference to radio communications. However, there is no guarantee that interference will not occur in a particular installation. If this equipment does cause harmful interference to radio or television reception, which can be determined by turning the equipment off and on, the user is encouraged to try to correct the interference by one or more of the following measures:

- Reorient or relocate the receive antenna.
- Increase the separation between the equipment and receiver.
- Connect the equipment into an outlet on a circuit different from that to which the receiver is connected.
- Consult the dealer or an experienced radio/TV technician for help.

Changes or modifications not expressly approved by Seiko Instruments could void the user's authority to operate the equipment.

Innovation, Science and Economic Development (ISED) compliance statement

This device contains licence-exempt transmitter(s)/receiver(s) that comply with Innovation, Science and Economic Development Canada's licence-exempt RSS(s). Operation is subject to the following two conditions:
(1) This device may not cause interference.
(2) This device must accept any interference, including interference that may cause undesired operation of the device.

Restrictions: Operations in 5150-5350 MHz band is for indoor use only.

RF exposure compliance

This transmitter must not be co-located or operating in conjunction with any other antenna or transmitter.

Applied to only WLAN model:

contains FCC ID: 2ADXS-WFM60-SFP2501
contains IC: 12641A-WFM6SFP2501

1. INTRODUCTION

This manual describes how to handle SLP720RT series thermal printer (hereinafter referred to as printer), AC adapter and AC cable.

Read through "2. SAFETY PRECAUTIONS" and "3. OPERATING PRECAUTIONS" carefully before using the products, and handle them safely and properly.
Keep this manual in a place where it can be accessed quickly.

This manual consists of the following sections.

1. INTRODUCTION 1
2. SAFETY PRECAUTIONS 2
3. OPERATING PRECAUTIONS 5
4. PREPARATION 8
5. IDENTIFYING MODEL TYPE 9
6. EACH PART OF PRINTER 10
7. POWER CONNECTION 14
8. LOADING THERMAL PAPER 15
9. PREVENTION AND TREATMENT OF PAPER JAM 20
10. TEST PRINT 22
11. FUNCTION SETTINGS 25
12. CONNECTING TO HOST DEVICE 28
13. PRINTER MAINTENANCE 31
14. TROUBLESHOOTING 32
15. SPECIFICATIONS 33
16. ACCESSORIES AND CONSUMABLE PARTS 36
17. MS SETTINGS LIST 37

2. SAFETY PRECAUTIONS

In this SAFETY PRECAUTIONS, the following symbols are used to ensure safe and proper use of products and prevent from damaging devices.

WARNING	Failure to follow the instructions marked with this symbol could result in severe personal injury or death.
CAUTION	Failure to follow the instructions marked with this symbol could result in minor personal injury or property damage.

■About symbols

The symbol indicates information which you should pay attention to (including danger and warnings).

The symbol indicates information about prohibited procedures.

indicates "Disassembly is prohibited."

The symbol indicates information about obligated or instructed procedures.

indicates "Unplug the power plug from the outlet."

OPERATING PRECAUTIONS

The "products" shall collectively mean the printer, the AC adapter and the AC cable.

⚠WARNING

Never attempt the following. Failure to follow the instructions leads to fire, electric shock, or accident.	
	DO NOT insert any foreign objects such as a piece of metal or any liquid into the products.
	DO NOT touch the terminals of the products, power connector, AC plug, and DC plug. To avoid short circuits, prevent terminals of the products, power connector, AC plug, and DC plug from touching any conductor such as metal.
	Take care not to spill liquid on the products.
	DO NOT touch the products with wet hands.
	DO NOT disassemble or reconstruct the products.
	Use the printer only with the specified AC adapter and specified AC cable.
	DO NOT use the AC adapter at a voltage other than the specified voltage.
	Keep the terminals of the products, power connector, AC plug, and DC plug away from dust and metal objects.
	Make sure the AC plug and DC plug are securely plugged in when using the products.
	DO NOT damage the AC cable, AC plug, and DC plug. DO NOT bend, pull, twist the cable forcibly or place heavy stuff on it.
Be sure to observe the following instructions. Failure to follow the instructions may lead fire, electric shock, or accident.	
	Be sure to use only in countries where the products meet the regulations. Using non-compliant products may endanger the safety of products or be considered against regulations.
	The power cord is a 3-prong power cord with a ground wire. Use a 3-prong power outlet with a protective earth terminal.
	Be sure to hold the plug when unplugging the AC cable from the outlet.

For Wireless communication

Observe the following instructions.	
	Always turn off the printer in areas or regions where its use is prohibited, such as in an airplane.
	The printer may affect medical or other electronic devices. Obtain information and data concerning influence due to radio interference from each device manufacturer or dealer.

Procedures to take when in trouble

Follow the instructions in the following cases. Failure to follow the instructions may lead fire, electric shock, or accident.	
	Turn off the printer, and unplug the AC plug from the outlet in any of the following cases: ◆ Abnormal status continues. ◆ The products are giving off an unusual smell, smoke, excessive heat or unusual noise. ◆ A piece of metal, water or other foreign objects get into the products. ◆ The case is broken.
	When the cable of the AC adapter or AC cable is damaged, unplug the AC plug from the outlet. DO NOT use a damaged AC adapter or AC cable.

⚠CAUTION

Observe the following instructions. Failure to follow the instructions may lead fire, electric shock, or accident.	
	Turn off the printer and unplug the AC plug from the outlet when not in use for a long time or before maintenance.
	DO NOT use or store the products in the following locations: ◆ Locations exposed to direct sunlight or high temperature. ◆ Locations exposed to high humidity, a lot of dust, and liquid. ◆ Locations subject to strong vibration, or unstable locations.
	DO NOT cover the products with a cloth when in use.
	NEVER touch the thermal head immediately after printing because it may get hot. Be sure to allow it to cool down before clearing a paper jam or cleaning the head.
	The autocutter printer has an exposed cutter blade in the paper outlet. Do not insert fingers into printer. NEVER touch the cutter blade while the top cover of the printer is open.
	Keep loose objects such as long hair away from the printer while the printer operates. When they fall into the printer, it may cause personal injury or damage the printer.
	Keep the products away from infants and children.

3. OPERATING PRECAUTIONS

Be careful of the following precautions and use the products properly in order to deliver and maintain the full performance of the products.

■Using Products

Precautions for use environment

- ◆ Be careful not to drop or bump the products on a hard surface.
- ◆ DO NOT install the products in direct sunlight.
- ◆ Be careful about the ambient temperature and humidity.
  Suitable environment for the use of the printer is as follows:
  - Range of the temperature : 5°C to 45°C (41°F to 113°F)
  - Range of the humidity : 10%RH to 90%RH (Non condensing)

  See "15. SPECIFICATIONS" for the guaranteed humidity range at each temperature.
- ◆ DO NOT install the products near devices that generate strong magnetism such as a copy machine motor.
- ◆ DO NOT install the products in a location that is subject to corrosive gas, siloxane and so on.
- ◆ DO NOT connect the AC adapter or AC cable to the same outlet with devices that generate noise.

Precautions on use and operation

- ◆ DO NOT print without the thermal paper.
- ◆ DO NOT use thermal papers taped together.
- ◆ NEVER forcibly pull out the thermal paper by hand with the thermal paper loaded.
- ◆ DO NOT open the top cover during printing or cutting.
- ◆ DO NOT connect or disconnect the interface cable during printing or communication.
  DO NOT touch the plug of the interface cable during printing.
- ◆ When handling the printer, be aware of static electricity. When the static electricity is discharged, this could cause a USB communication failure.
  When this problem occurs, disconnect the USB plug that is connected to the host device and wait a few seconds before connecting it again.
- ◆ DO NOT use the thermal head when it is wet. Doing so may damage the printer.
- ◆ Printing under low temperature environment or printing at a high print rate might cause unclear printing or generate loud sound. This is not a failure in the printer but an inherent paper phenomenon.
- ◆ When printing at a high print rate for longer length, even non-printing area may be colored due to accumulation of heat in the thermal head.
  Verify the performance with your actual device in advance.
- ◆ Paper feeding may be confused a few dot-lines when printing is started or when printing and paper feeding are resumed from a pause state. When printing bit images and so on, always feed the thermal paper for at least 24 steps at the start of printing, and print without interrupting.

- The AC adapter may get a little hot when in use. This is normal and not a malfunction.
- Always use the specified thermal paper. See "16. ACCESSORIES AND CONSUMABLE PARTS" for details.
- DO NOT touch the thermal head directly. Doing so may result in poor printing quality due to the dirt or damage by the static electricity.
- NEVER touch the thermal head, paper sensor, or platen roller directly while opening the top cover to install the thermal paper. Doing so may cause injury or other accidents.
- Be careful not to get your fingers or hands caught in the printer when opening or closing the top cover.
- The autocutter printer has an exposed cutter blade in the paper outlet. Do not insert fingers into printer.
  NEVER touch the cutter blade while the top cover of the printer is open.
- In order to ensure the function and the safety of the product, be sure to observe the installation direction.
- DO NOT drop or insert any foreign objects such as clips, pins, and screws in the internal parts or slot of the products.
- DO NOT drop any liquid or spray a solvent to the products.
- NEVER use sharp object such as pen tip to push the switch on the operation panel.
- Make sure not to injure your body or other objects by the plate edge.
- As the plated sheet steel is used in the printer, the edge face might rust.
- When moving the printer from the installation site, hold the printer tightly with both hands, then lift it upward slowly to leave the rubber feet from the installation surface. Lifting it rapidly or moving it horizontally may peel the entire rubber feet, peel their surfaces, or damage the outer case.
- When something goes wrong with the printer during use, stop using it immediately, and unplug the AC plug from the outlet.
- NEVER disassemble the printer without a serviceman.

Precautions for Wireless communication

- The Wireless LAN model using IEEE802.11b/g/n operates in the 2.4 GHz frequency range, and IEEE802.11a/n operates in the 5 GHz frequency range. So if these models are used around other wireless LAN or any equipment using the same frequency range such as a microwave oven, radio frequency interference may occur, and the communication may become unstable. When it happens, turn off the interfering equipment or increase the distance. Alternatively, shorten the distance between the host device and the printer as much as possible.
- When operating the Wireless LAN model using IEEE 802.11a/n, the printer may stop communication temporarily before outputting radio wave to the target channel not to affect the weather radar, air traffic control radar or others. This is to monitor the presence of radar waves for a certain time. If the printer detects radio waves such as radar during operation, it may switch to another channel.

Precautions for maintenance

- Clean the products' cases using a soft and lint-free cloth. DO NOT use alcohol or other solvent.
- Before using, clean the terminals using a dry, soft, and lint-free cloth when they are dirty. If the terminals are dirty, it may cause contact failure.
- When cleaning the thermal head, always wipe it with a cotton swab or other soft material.

◆ When cleaning the cutter, use a thin wooden or plastic stick to avoid scratching the blade.

Precautions for storing

◆ Turn off the printer when not in use.
In addition, when the printer is not used for a long time, unplug the AC cable from the outlet.
Moreover, set thermal paper to protect the platen.

■Thermal Paper Handling

◆ Store the thermal paper in a cool, dry, and dark place.

◆ DO NOT rub the thermal paper with hard objects.

◆ DO NOT leave the thermal paper near organic solvents.

◆ DO NOT allow PVC film, erasers, or adhesive tape to touch the thermal paper for long periods.

◆ DO NOT stack the thermal paper with diazo copies immediately after copying.

◆ DO NOT use chemical glue.

◆ DO NOT use 2-ply thermal paper and perforated thermal paper.

■Precautions on Discarding

When discarding used products, discard them according to the disposal regulations and rules of each district.

■Notation

The following 2 types of notation are used throughout this manual to denote operating precautions and items to remember besides the symbols shown in "2. SAFETY PRECAUTIONS":

NOTE

◆ Operating Precautions

This box contains items that may lead to a malfunction or deterioration of performance when not followed.

HINT

• Items to Remember

This box contains helpful hints to remember when using the products.

4. PREPARATION

Make sure that the printer and its accessories are contained.
Keep the package and packing materials for future transportation or long-term storage.

Printer

Documents
- **Safety Precautions**
- **Quick Start Guide**
- **DC Plug Connection Method**

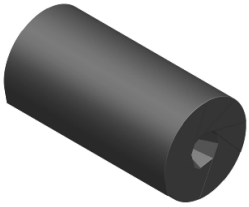

Sample Thermal Paper

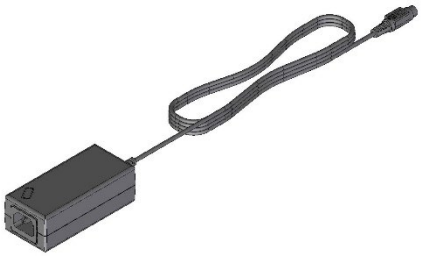

AC Adapter

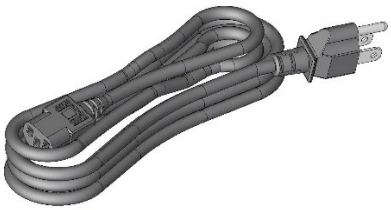

AC Cable

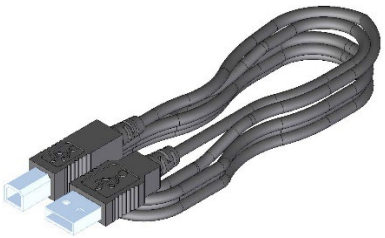

USB Cable*

*: USB model only

The available accessories are shown below. See "15. SPECIFICATIONS" and "16. ACCESSORIES AND CONSUMABLE PARTS", and be sure to purchase our specified products listed on these references.

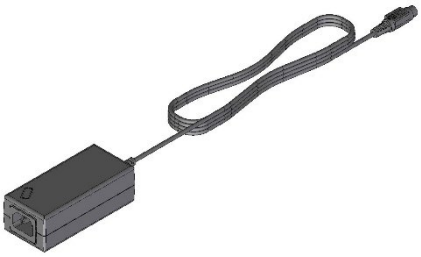

AC Adapter

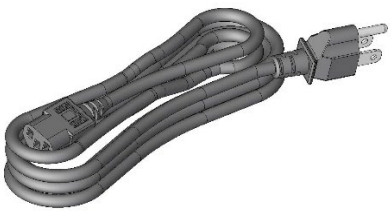

AC Cable

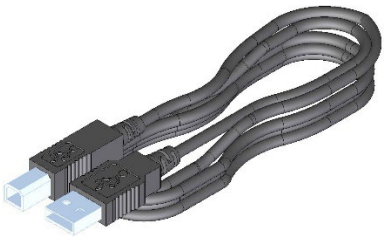

USB Cable

5. IDENTIFYING MODEL TYPE

The printer model is identified as follows:

SLP720RT-xK2Fx1

Series name

Interface
- U: USB
- E: Ethernet + USB
- W: Wireless LAN

Country/Region
- U: USA, Canada
- E: EU, EFTA, UK, Turkey
- J: Japan
- 1: Unspecified (other than Wireless LAN model)

◆ When the printer is incorporated into your equipment and then supplied electric power from the equipment, follow the rated value of input voltage for SLP720RT described in the printer specifications of "15. SPECIFICATIONS".

◆ When using a power supply other than the specified AC adapter, use a power supply at your own risk under the safety standard and EMC regulations.

6. EACH PART OF PRINTER

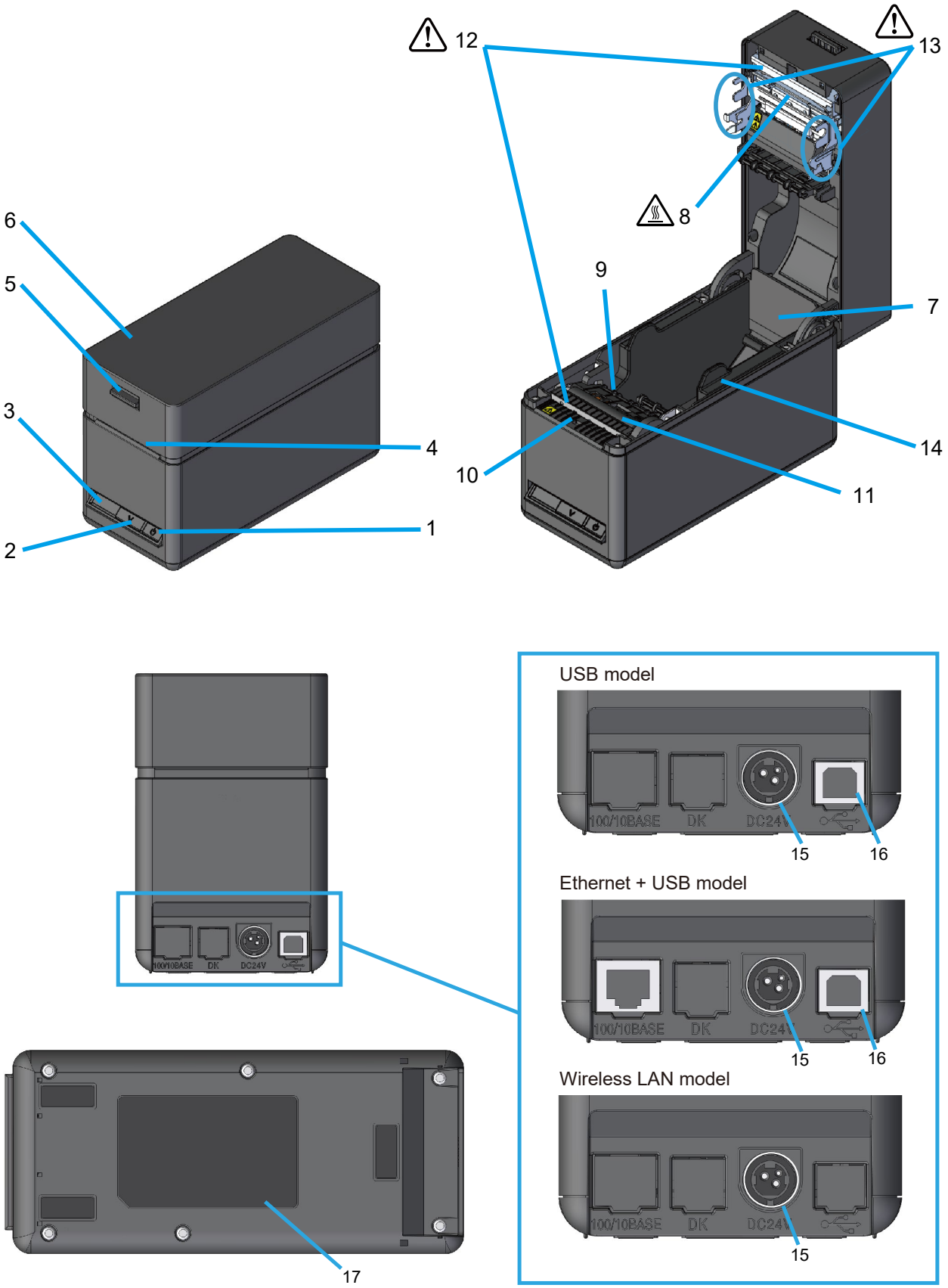

1 POWER Switch

The POWER Switch turns the power on or off. The LED lights when turning on the power. To turn off the power, hold down the switch for longer than 3 second.

2 FEED Switch

The FEED Switch operates paper feed. When holding down the switch for a few seconds, the printer feeds the thermal paper continuously for the period of held.

3 LED

The LED lights when turning on the power. See "LED Indication" on the next page for details.

4 Paper outlet

Thermal paper is ejected from here. The cutter is attached.

5 Release lever

The lever is for opening the top cover to set the thermal paper. It is also used to open the top cover when a paper jam occurs.

6 Top cover

The thermal head is released from the thermal paper when opening this cover. Open this cover when replacing the thermal paper or cleaning the thermal head.

7 Paper holder

The paper holder holds the thermal paper.

8 Thermal head ⚠

The thermal head prints data on the thermal paper. NEVER touch the thermal head with hands immediately after printing because it may get hot.

9 Black mark sensor

The sensor detects thermal paper presence and the black mark.

10 Taken sensor

The sensor detects the removal of thermal paper. When Taken Mode is "Enable", the next printing starts after removing the previous paper remaining in the paper outlet. See "11. FUNCTION SETTINGS" for details.

11 Platen

The platen brings the thermal paper into contact with the thermal head. The platen rotates to feed the paper.

12 Cutter ⚠

The cutter cuts the thermal paper automatically after printing. DO NOT touch the cutter blade directly while the top cover is open.

13 Sheet metal parts ⚠

Make sure not to injure your body or other objects as the sheet metals around the thermal head and the cutter have sharp edges.

14 Paper guide

The paper guide is adjusted according to the width of the paper to be used.

15 Power connector

The AC adapter is connected here.

16 Interface connector

The interface cable is connected here.

17 Product label

This label indicates the product name, rated value, serial number, and the MAC address for each product.

■LED Indication

Printer Status	LED (Color)*1	LED (Lighting Pattern)
Power off	-	Off
Power on (print-ready) / Connecting Wireless LAN communication	Green*2	On*2
Printing	Green	On
Waiting for test print	Green	Blink-2
Output buffer full	Green	Blink-1
Out-of-paper error	Lime yellow	Blink-1
Paper jam error while detecting mark	Lime yellow	Blink-3
Cover open error	Lime yellow	On
Hardware error	Red	On
Head temperature error	Purple	On
Voltage error	Purple	Blink-1
Cutter error	Purple	Blink-2
Not connected Wireless LAN communication	Blue	Blink-2
Paper removal waiting	Blue	Blink-3
Rewriting firmware	White	On
In function setting mode	White	On

*1: The color tone may vary depending on the individual difference of the products and the viewing angle.
*2: The value at the factory

■LED Blink Pattern

Status	Pattern
Blink-1	
Blink-2	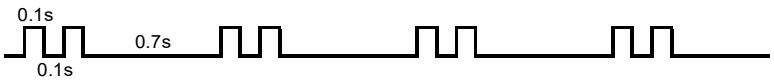
Blink-3	

■Error and Recovery Procedure

When an error occurs, the printer stops printing operation. However, the data receiving is enabled. The table below shows errors and their recovery procedures.

Error	Detail	Recovery Procedure	Priority*1
Return-waiting	The printer becomes this state after releasing out-of-paper error, cover open error, cutter error or voltage error.	The return-waiting state is released after about 1 second, and the printer becomes print-ready state.	-
Output buffer full	Output buffer of the printer is full.	Read response data from the host device.	1
Paper removal waiting	Paper remains in the paper outlet after cutting the paper.	Remove the paper from the paper outlet.	2
Out-of-paper error	There is no thermal paper.	Open the top cover, load thermal paper, and then close the top cover.	3
Cover open error	The top cover is open.	Close the top cover.	4
Cutter error	Cut failure due to paper jam at cutting. ・Cutter work lock error (The cutter blade is stuck protruding out of home position*2.) ・Cutter home lock error (The cutter blade is stuck at home position*2.)	Open the top cover to remove the error cause and close the top cover, the printer automatically recovers. If the top cover is not open or the printer does not automatically recover, see "Clearing Cutter Error" in "9. PREVENTION AND TREATMENT OF PAPER JAM".	5
Voltage error	The power voltage is out of the allowable range.	The printer automatically recovers when the voltage is returned to the allowable range.	6
Head temperature error	Head temperature rises to about 85°C (185°F) or higher.	The printer automatically recovers when head temperature becomes about 80°C (176°F) or lower.	7
Hardware error	An abnormality occurs in the thermal head or the circuit board.	Recovery is not possible. Request for repair.	8

*1: This indicates the priority when multiple errors occur simultaneously. The bigger number indicates higher priority.
For example, when "Cover open error" and "Out-of-paper error" occur simultaneously, the LED shows "Cover open error" which has the higher priority.

*2: The cutter blade operates starting from the home position (the blade is stored).

7. POWER CONNECTION

To supply power to the printer, use the AC adapter.
Be sure to see "15. SPECIFICATIONS" for the AC adapter.
The AC adapter and the AC cable are optional accessories. See "15. SPECIFICATIONS" and "16. ACCESSORIES AND CONSUMABLE PARTS", and be sure to purchase our specified products listed on these references.

■Connecting AC Adapter

(1) Connect the AC cable to the AC adapter.

(2) Plug the DC plug of the AC adapter to the power connector of the printer.

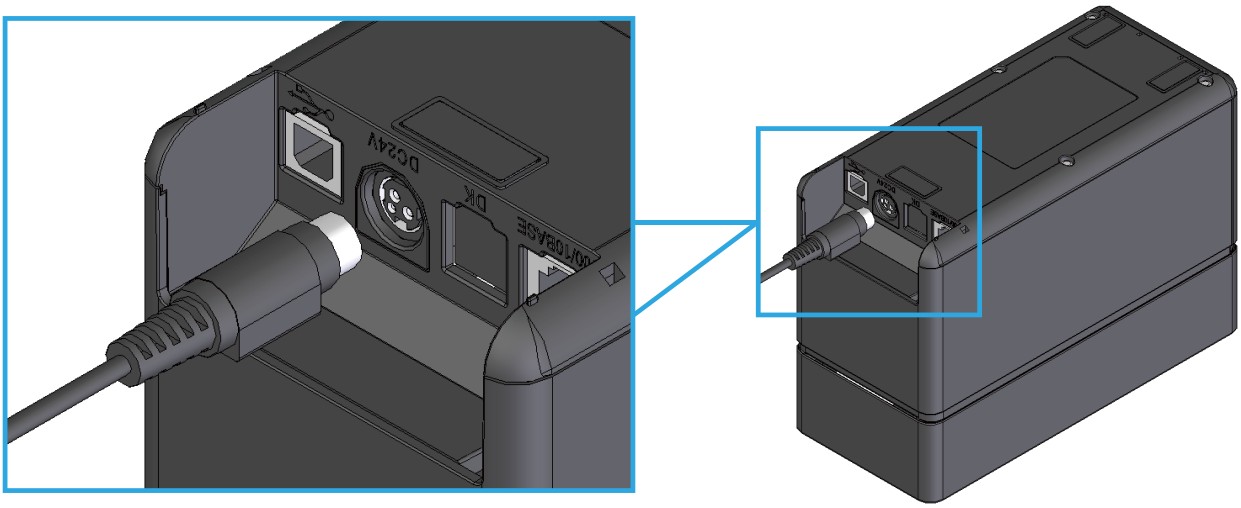

(3) Plug the AC plug of the AC cable to an outlet.

NOTE

- Plug the DC plug into the power connector of the printer in the correct orientation. When plug the DC plug forcibly in wrong orientation, it may cause damage.
- Unplug the AC plug of the AC cable from the outlet when inserting or pulling out the DC plug.
- When the printer is not used for a long time, unplug the AC plug of the AC cable from the outlet.

8. LOADING THERMAL PAPER

The printer uses the thermal paper roll (hereinafter referred to as thermal paper).
Use the thermal paper with printing surface rolled outwards.
The function settings of the printer differ depending on the thermal paper. See "11. FUNCTION SETTINGS" for details.

■Adjusting Paper Width

(1) Pull the release lever of the printer upward and open the top cover.

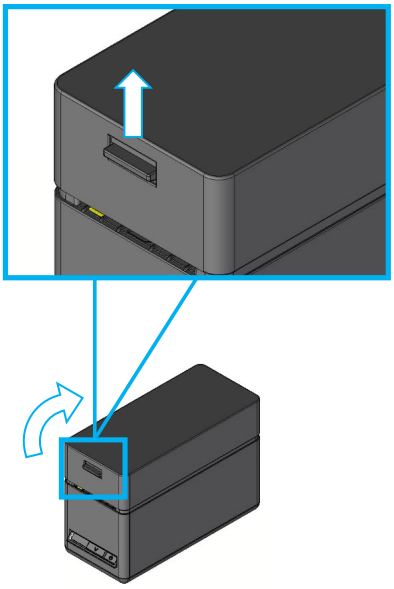

(2) Hold the tabs of the paper guide with the fingers of both hands and move them slowly.

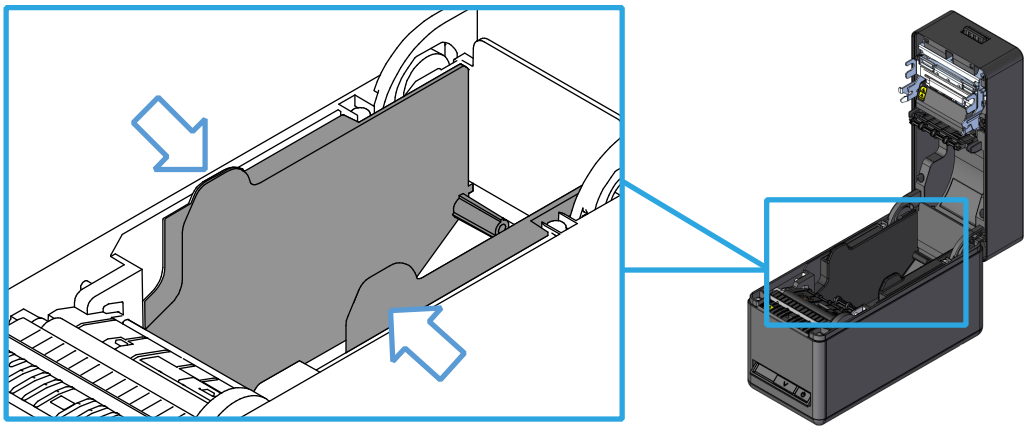

NOTE

- ◆ Set the paper width before using the printer for the first time. DO NOT change the paper width after starting to use the printer. Doing so may damage the printer.
- ◆ When the thermal paper smaller than 58 mm in width is used, rubber crumbs of the platen may be generated because the platen contacts with the thermal head. Remove rubber crumbs regularly to maintain the printing quality.

■Loading Thermal Paper

(1) Pull the release lever of the printer upward and open the top cover.

(2) Take the glued end from the thermal paper.

(3) Load the thermal paper into the paper holder.

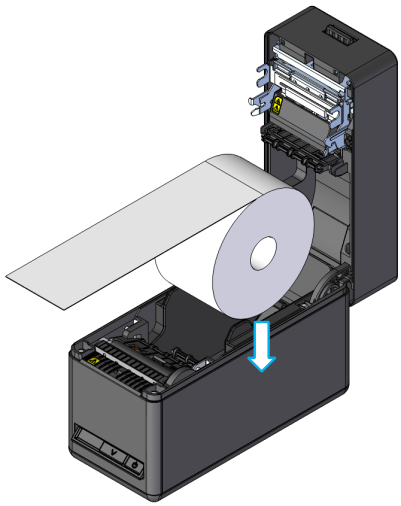

NOTE

- ◆ DO NOT touch the cutter blade directly.
- ◆ Make sure not to injure your body or other objects as the sheet metals around the thermal head and the cutter have sharp edges.

(4) Pull the thermal paper straight. Make sure that the thermal paper does not slant.

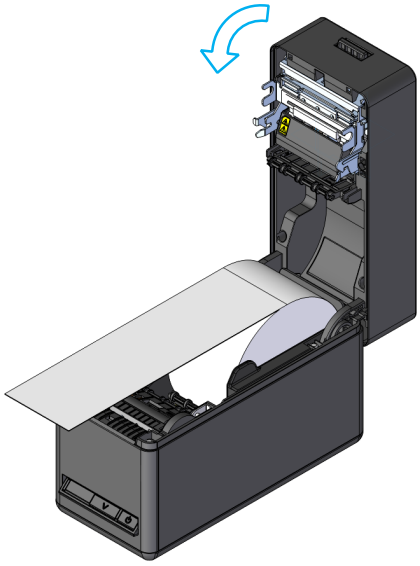

(5) Close the top cover firmly by pushing the center part downward until it locks into place.
After closing the top cover, paper feed and paper cutting are performed automatically.

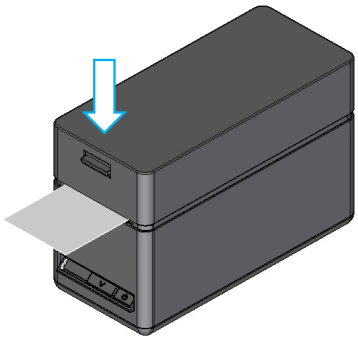

NOTE

- ◆ Pull the thermal paper straight.
- ◆ Push the top cover firmly to close and avoid one side lock defect.
- ◆ Be sure to operate the release lever to the end. If not, the top cover may not open.
- ◆ DO NOT cover the paper outlet or hold down the thermal paper ejected. Doing so may cause a paper jam.
- ◆ DO NOT touch the platen. Doing so may cause loss of printing quality or damage.

HINT

- Leaving the printer with the thermal paper for a long time may cause a paper feeding problem because the surface of the thermal paper sticks to the thermal head (in the case of linerless label, the adhesive sticks to the platen) due to the environmental changes. In that case, open the top cover to separate the thermal paper from the thermal head and the platen, and then close the top cover before use.

■Thermal Paper Shape

Always use the specified thermal paper. See "16. ACCESSORIES AND CONSUMABLE PARTS" for details.

NOTE

- ◆ DO NOT use the thermal paper whose end is glued, taped or folded.
- ◆ Use the thermal paper whose core outside diameter is ϕ 12 mm or more for receipt and ϕ 18 mm or more for label paper.

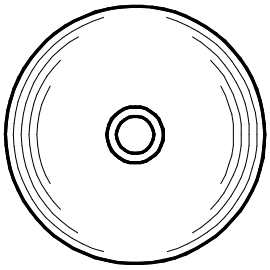

CORRECT

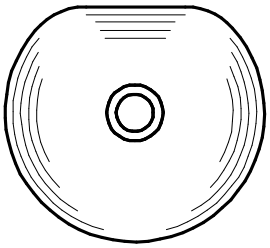

INCORRECT

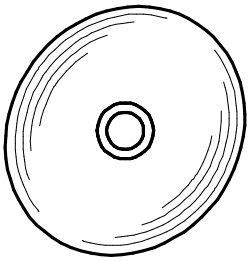

CORRECT

NOTE

- ◆ DO NOT use deformed thermal paper. Doing so may cause the printer damaged.

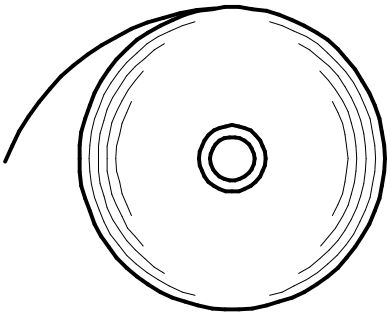

CORRECT

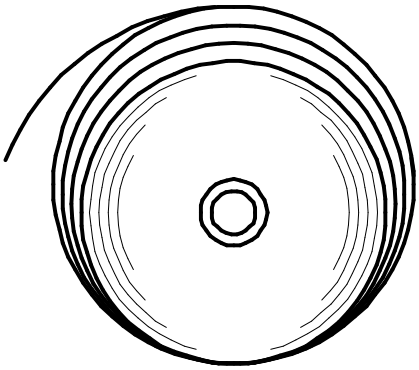

INCORRECT

NOTE

- ◆ In the case of using loosened thermal paper roll, rewind the roll before using it.

■Easy Paper Setting

It is necessary to set the paper to be used. It can be easily set by following procedures.

(1) With the printer turned on, operate the release lever to open the top cover.

(2) Press the FEED Switch a number of times within 4 seconds according to the paper to be used in the table below.

(3) The LED blinks once after 4 seconds. Then, close the top cover.

Thermal Paper	Mark Mode	Taken Mode	Number of Times to Press FEED Switch	Standby LED
Linerless label	Disable	Enable	3	Green
Linerless label	Enable	Enable	4	Green
SLP Label	Enable	Disable	5	Aqua
Receipt	Disable	Disable	6	Blue

(4) The LED turns to the lighting of "Standby LED" color.

NOTE

◆ The "LED (Color)" of the printer status "Power on (print-ready) / Connecting Wireless LAN communication" changes to the color of "Standby LED" that is set in easy paper setting.
See "LED Indication" described in "6. EACH PART OF PRINTER" for details.

◆ For easy paper setting, only the values of the following functions are changed.
・Taken Mode Selection
・Mark Mode Selection
・Standby LED Selection
To change the other settings, see "11. FUNCTION SETTINGS".

9. PREVENTION AND TREATMENT OF PAPER JAM

■Prevention of Paper Jams

(1) DO NOT touch the thermal paper while the paper is being ejected or before it is cut. Covering the paper outlet or pulling out the thermal paper when ejecting may cause a paper jam, cut failure, or line feed failure. NEVER open the top cover during paper cutting.

(2) The cut linerless label may stick to the paper outlet, causing a paper jam.
When printing continuously on linerless label, set the memory switch MS1-2 (Taken Mode Selection) to "Enable". By doing this, the next printing will start after removing the previous paper remaining in the paper outlet.
When printing continuously on receipt or SLP Label, set MS1-2 (Taken Mode Selection) to "Disable".
See "11. FUNCTION SETTINGS" for details.

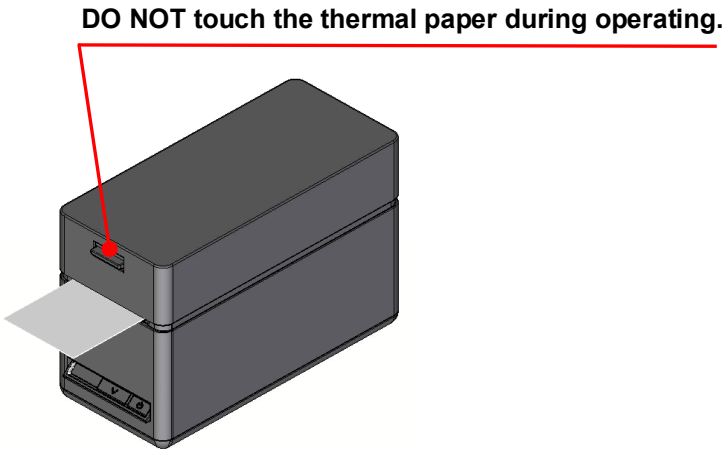

■Clearing Paper Jam

When a paper jam occurs, remove the thermal paper according to the following procedure.

(1) Turn off the printer.

(2) Operate the release lever to open the top cover, and remove the jammed paper.

NOTE

◆ Do not damage the printer when removing the thermal paper.
Especially, do not touch the thermal head because it is easy to break.

(3) Load the thermal paper straight and then close the top cover gently.

(4) Turn on the printer.

(5) When the printer is recovered normally, the LED turns green.

NOTE

◆ DO NOT touch the thermal head immediately after printing because it may get hot.

■Clearing Cutter Error

When the cutter is locked during paper cutting due to a cutter error, recover the printer according to the following procedure.

(1) With the printer turned on, operate the release lever to open the top cover.
When the top cover is opened, the cutter blade returns. If there is a paper jam, remove it.

(2) Set the thermal paper straight and then close the top cover gently.

(3) Turn on the printer.

(4) When the printer is recovered normally, the LED turns green.

NOTE

- ◆ DO NOT use such as ballpoint pens, drivers, and cutter knives to remove a jammed paper. Be careful not to damage the printer.
  Especially, do not touch the thermal head because it is easy to break.
- ◆ Be careful not to cut your fingers or be injured by the cutter blade.
- ◆ DO NOT apply excessive force on the cutter blade.

10. TEST PRINT

The printer can perform a test print.
In the test print, such as the firmware version and setting values of function settings are printed.

(1) Install the thermal paper in the printer as instructed in "8. LOADING THERMAL PAPER". Ensure that no error occurs, and then turn off the printer.

(2) Hold the FEED Switch down and press the POWER Switch, then release the POWER Switch. Release the FEED Switch when the test print has been started.

(3) The printer cuts the paper and returns to the print-ready status when the test print has completed.

```
SLP series Interface
SLP720RT [ Ver X.XX ]
  DD.MMM.YYYY
Copyright(C):SII

* MS1 *
2)  Taken Mode:Enable
3)  Mark Mode:Disable
4-5)Standby LED:Green
7)  Auto Activation by AC:Enable
8)  Power SW:Enable

* MS4 *
4)  Paper Width:58[mm]
6)  Paper Auto Detection:Disable
7-8)Print Speed:High

* MS5 *
1)  Auto Status Back:Enable
2)  Init. Response:Enable
3)  Error Through:Enable
4)  Response Data Discarding:
      Disable
6-7)Paper Set Handle:
      Standard
8)  Cutting Method:Full

* MS6 *
1-8)Print Density:100[%]

* MS7 *
1-8)Thermal Paper:
      Linerless label
* MS13 *
1)  Kanji Code:
      JIS Code
3)  Realtime Command:Enable

* MS17 *
1-2)Paper Saving:Disable
3)  Backfeed After Cut:
      Enable

* Communication Type *
 USB Communication
 Control Model:SLP720RT
 USB Device Class:Printer

* Font Information *
 Character Code Table:
   Code Page437
 International Character:
   USA

* Serial Number Information *
 XXXXXXXXXX
```

Figure 10-1 Test Print Example (USB Model)

```
SLP series Interface
SLP720RT [ Ver X.XX ]
  DD.MMM.YYYY
Copyright(C):SII

* MS1 *
2)  Taken Mode:Enable
3)  Mark Mode:Disable
4-5)Standby LED:Green
7)  Auto Activation by AC:Enable
8)  Power SW:Enable

* MS4 *
4)  Paper Width:58[mm]
6)  Paper Auto Detection:Disable
7-8)Print Speed:High

* MS5 *
1)  Auto Status Back:Enable
2)  Init. Response:Enable
3)  Error Through:Enable
4)  Response Data Discarding:
      Disable
6-7)Paper Set Handle:
      Standard
8)  Cutting Method:Full

* MS6 *
1-8)Print Density:100[%]

* MS7 *
1-8)Thermal Paper:
      Linerless label

* MS13 *
1)  Kanji Code:
      JIS Code
3)  Realtime Command:Enable

* MS17 *
1-2)Paper Saving:Disable
3)  Backfeed After Cut:
      Enable

* Communication Type *
 LAN Communication
 MAC Address:     XX:XX:XX:XX:XX:XX
 IP Address:      192.168.0.190
 Subnet Mask:     255.255.255.0
 GateWay Address: 0.0.0.0
 DHCP Client:     Enable
 Physical Layer:  Auto Nego

* Font Information *
 Character Code Table:
   Code Page437
 International Character:
   USA

* Serial Number Information *
 XXXXXXXXXX
```

Figure 10-2 Test Print Example (Ethernet + USB Model)

Table 10-1 Ethernet Information

Item	Description
MAC Address	MAC Address
IP Address	IP Address
Subnet Mask	Subnet Mask
GateWay Address	Gateway Address
DHCP Client	Selected DHCP Client Mode
Physical Layer	Selected Communication Speed and Communication Mode

```
SLP series Interface
SLP720RT [ Ver X.XX ]
  DD.MMM.YYYY
Copyright(C):SII

* MS1 *
2)  Taken Mode:Enable
3)  Mark Mode:Disable
4-5)Standby LED:Green
7)  Auto Activation by AC:Enable
8)  Power SW:Enable

* MS4 *
4)  Paper Width:58[mm]
6)  Paper Auto Detection:Disable
7-8)Print Speed:High

* MS5 *
1)  Auto Status Back:Enable
2)  Init. Response:Enable
3)  Error Through:Enable
4)  Response Data Discarding:
      Disable
6-7)Paper Set Handle:
      Standard
8)  Cutting Method:Full

* MS6 *
1-8)Print Density:100[%]

* MS7 *
1-8)Thermal Paper:
      Linerless label

* MS13 *
1)  Kanji Code:
      JIS Code
3)  Realtime Command:Enable

* MS17 *
1-2)Paper Saving:Disable
3)  Backfeed After Cut:
      Enable


* Communication Type *
* WLAN Communication *
 Mode:            Simple AP
 Radio:           802.11b/g/n
 Country:         US
 Channel:         Auto
 SSID:            SII-Printer
 Security:        None
 MAC Address:     XX:XX:XX:XX:XX:XX
 IP Address:      192.168.0.1
 Subnet Mask:     255.255.255.0
 Default GateWay: 0.0.0.0
 Module Ver.:     XX.XX

* Font Information *
 Character Code Table:
   Code Page437
 International Character:
   USA

* Serial Number Information *
 XXXXXXXXXX
```

Figure 10-3 Test Print Example (Wireless LAN Model)

Table 10-2 Wireless LAN Information

Item	Description
Mode	Selected Wireless LAN Operation Mode
Radio	Selected Wireless LAN Standard
Country	Corresponding country US: USA, Canada JP: Japan EU: EU, EFTA, UK, Turkey
Channel	Selected Channel
SSID	SSID Setting
Security	Selected Security
DHCP	Selected DHCP Client Mode (in Client Mode)
MAC Address	MAC Address
IP Address	IP Address*
Subnet Mask	Subnet Mask*
Default Gateway	Gateway Address*

*: When Client Mode is selected in the Mode, IP address, Subnet Mask and Gateway Address obtained from DHCP Server are printed. When the Power SW is pressed and canceled data queue, "---,---,---,---" is printed. In case of DHCP timeout, the Setting value is used and printed.

11. FUNCTION SETTINGS

This printer can set various functions according to use conditions and intended use.
The setting contents are stored in the Memory Switch (hereinafter referred to as MS) in the FLASH memory mounted in the printer, and it is possible to set MS by using the switches, software, or inputting command.
This section describes the setting procedure by using the switches.
See "17. MS SETTINGS LIST" for the MS setting list.

HINT

- The memory switch can also be set from software. Download software from the download page listed on the rear cover.
  The following software can be set.
  - ・For Windows: "SII Printer Setting Utility" included in the printer driver
  - ・For iOS and Android: App "SII Printer Utility" provided by App Store or Google Play

■Procedure for Setting Functions Using Switches

To set the functions using the switches, set the printer in the Setting Mode.
To enter the Setting Mode, follow the procedure below.

(1) Load the thermal paper in the printer as instructed in "8. LOADING THERMAL PAPER".
Ensure that no error occurs, and then turn off the printer.
See "6. EACH PART OF PRINTER" for the error status.

(2) Hold the FEED Switch down and press the POWER Switch, then release the POWER Switch.
Keep pressing the FEED Switch until the test print is completed.

(3) A message of mode selection is printed as shown in Figure 11-1 when the test print has completed.
To enter the Setting Mode, press the FEED Switch.

```
[Enter Setting Mode]
Enter Setting Mode: Feed SW
Exit: Power SW
```

Figure 11-1 Mode Selection Message

(4) A message for selecting MS to be set is printed as shown in Figure 11-2 when the printer enters the Setting Mode.
Press the FEED Switch the number of times corresponding to the selected MS number, and then press the POWER Switch.

```
[MS Selection]
0 : Exit
1 : MS1
2 : MS4
3 : MS5
4 : MS6
5 : MS7
6 : MS13
7 : MS17
8 : I/F Setting
9 : International Character
10: Character Code Table
11: Default Setting
Press the FEED switch an equal
number of times to the selected number.
After that, press the POWER SW.
```

・For “8 : I/F Setting”, the items to be set are different for each model.
・When pressing the FEED Switch once, "1 : MS1" is selected.
・When pressing the POWER Switch without pressing the FEED Switch, "0 : Exit" is selected.

Figure 11-2 MS Selection Message

(5) A message for selecting the function assigned to the selected MS is printed as an example shown in Figure 11-3.
Press the FEED Switch the number of times corresponding to the selected function number, and then press the POWER Switch.

```
[Function selection of MS1]
0 : Return to MS selection
1 : Taken Mode
2 : Mark Mode
3 : Standby LED
4 : Auto Activation by AC
5 : Power SW
Press the FEED switch an equal
number of times to the selected number.
After that, press the POWER SW.
```

・When pressing the FEED Switch 3 times, "3 : Standby LED" is selected.
・When pressing the POWER Switch without pressing the FEED Switch, "0 : Return to MS Selection" is selected.

Figure 11-3 Function Selection Message (Example: Selected MS1)

(6) A message for selecting the setting value of the selected function is printed as an example shown in Figure 11-4.
Press the FEED Switch the number of times corresponding to the selected setting value number, and then press the POWER Switch.

```
[Standby LED]
0 : Return to function selection
1 : Aqua
2 : Green
3 : Off
4 : Blue
Press the FEED switch an equal
number of times to the selected number.
After that, press the POWER SW.
```

・When pressing the FEED Switch twice, "2 : Green" is selected.

Figure 11-4 Setting Value Selection Message (Example: Selected Standby LED)

(7) A message for confirming the selected setting value is printed as an example shown in Figure 11-5.

```
[Standby LED]
Set Green
Save setting    : Feed SW
Discard setting : Power SW
```

Figure 11-5 Setting Value Confirmation Message (Example: Selected Green)

Press the FEED Switch to save the setting value to the memory. Figure 11-2 is printed.

Press the POWER Switch to discard the selected item. A message of the function selection is printed as an example shown in Figure 11-3. If select "0 : Return to MS Selection" there, function selection is not performed, and Figure 11-2 is printed.

To continue to set functions, return to (4).

(8) To exit the Setting Mode, select "0 : Exit" in Figure 11-2.
The test print and Figure 11-1 printing start again. Verify that the functions are properly set.

12. CONNECTING TO HOST DEVICE

The printer supports the USB interface, the Wireless LAN interface, and the Ethernet interface.
The available interface varies depending on the model, order the model of interface method to use from the following.

Model	Interface	Product Name
USB model	USB interface	SLP720RT-UK2F11
Ethernet + USB model	Ethernet interface USB interface	SLP720RT-EK2Fx1
Wireless LAN model	Wireless LAN interface	SLP720RT-WK2F11

Each interface cables are required separately for communication with the USB interface or Ethernet interface. See "15. SPECIFICATIONS" for details of interface specifications.
The communication speed may be decreased depending on processing by software or print contents.

■USB Interface / Ethernet Interface

(1) Ensure that the printer is off.

(2) Connect the interface cable to use to the interface connector on the back side of the printer.
The setting at the factory is the Ethernet interface. When using the USB interface, press the POWER Switch 3 times within 3 seconds when the printer status is "Power on (print-ready)".

(3) Turn on the printer, and send data from the host device to the printer.

(4) Verify that the data is printed correctly.

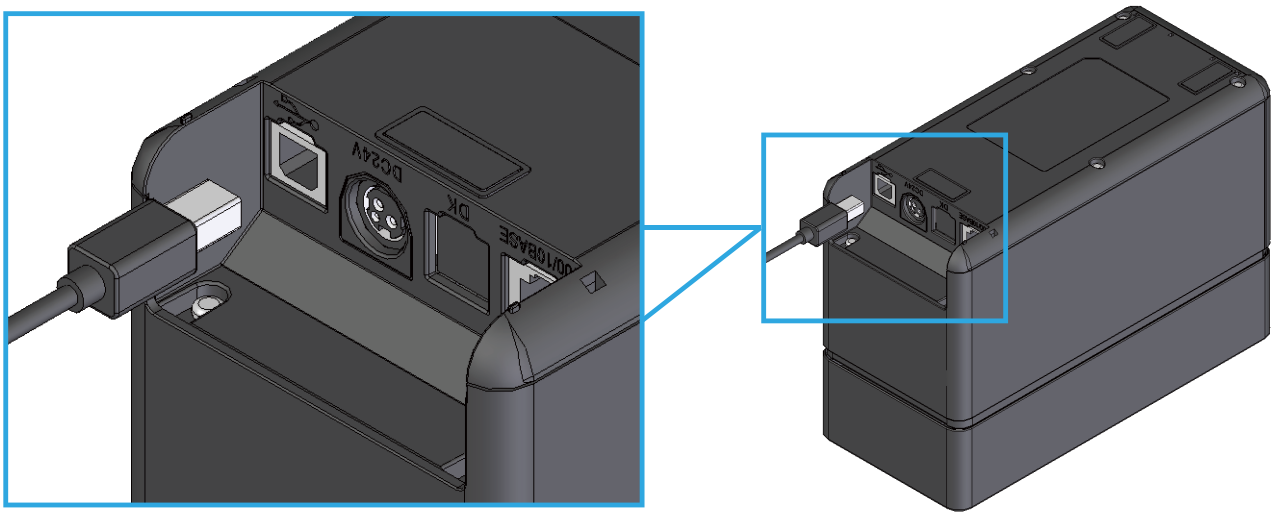

Figure 12-1 Printer and USB Cable Connection

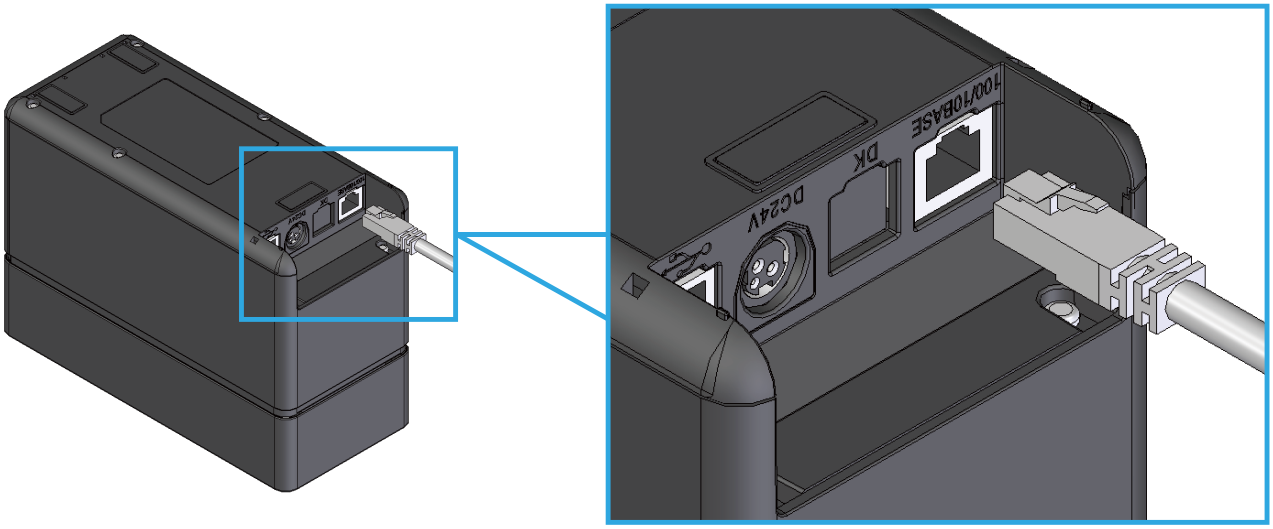

Figure 12-2 Printer and Ethernet Cable Connection

NOTE

- When connecting each interface cable to the interface connector, push the plug to the end.
- NEVER connect plugs of other interface cables including a modular cable or a phone line to the interface connector.
- When connecting an outdoor aerial-wired LAN cable, be sure to use it through another anti-serge device. Otherwise, the device may be damaged by induced lightning.
- For Ethernet interface, DHCP client function is set to "Enable". (At the factory)
  When connecting to a network that does not have the DHCP server function, set the DHCP client function to "Disable".

■ Wireless LAN Interface

(1) Turn on the printer and connect it to the host device wirelessly.
In the factory state, the settings are as follows:

Mode	: Simple AP (simple access point)
Standard	: IEEE802.11b/g/n (2.4GHz frequency range)
SSID	: SII-Printer
Security	: None
IP address for the printer	: 192.168.0.1

(2) View the page "http://192.168.0.1" from the Web browser.
The printer setting screen is displayed. Make necessary settings.
These settings are enabled after rebooting.

(3) Check the communication state on the host device.

(4) Send data from the host device, and verify that the data is printed correctly.

⚠WARNING

- ◆ The printer may affect medical or other electronic devices. Obtain information and data concerning influence due to radio interference from the respective manufacturers or dealers.
- ◆ When using the printer in medical institutions, follow their guidelines.
- ◆ DO NOT use the printer in areas or zones where its use is prohibited.

13. PRINTER MAINTENANCE

When paper powder or label glue accumulates on the thermal head, the platen, or the cutter, cleaning can maintain the print quality for an extended period of time.

■Cleaning Thermal Head / Platen / Rubber Feet / Cutter

(1) Turn off the printer.

(2) Unplug the AC plug of the AC cable from the outlet.

(3) Open the top cover.

(4) Clean the thermal head, the platen, and/or the rubber feet with a cotton swab moistened with a small amount of ethyl alcohol.

(5) Use a thin wooden or plastic stick to remove any dirt from the fixed and movable blades of the cutter.

(6) Wait until any ethyl alcohol remaining on the thermal head dries out completely, and then close the top cover.

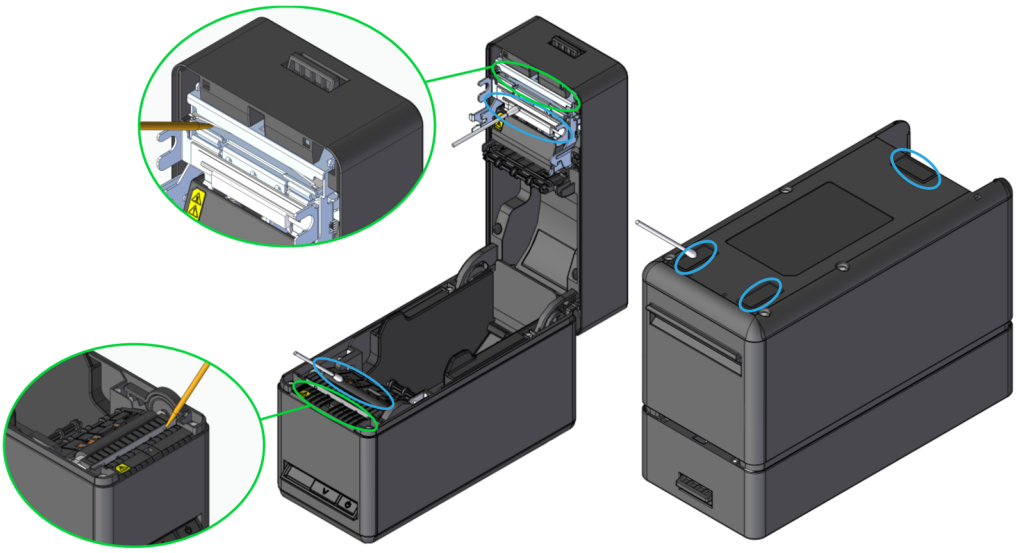

Figure 13-1 Cleaning Thermal Head / Platen / Rubber Feet / Cutter

NOTE

- Clean the thermal head after it cools down.
- Be sure to wipe the thermal head with a cotton swab or other soft material.
- When cleaning the cutter, use a thin wooden or plastic stick to avoid scratching the blade.
- DO NOT touch the cutter blade directly.
- Make sure not to injure your body or other objects as the sheet metals around the thermal head and the cutter have sharp edges.
- DO NOT touch the gear of the platen. Doing so may cause loss of printing quality or a failure.
- The rubber feet have the special adsorption structure. They lose adsorption force as dust or dirt adheres. However, it can be recovered by cleaning.
- When using Linerless label, clean the thermal head, the platen, and the cutter once every 30 rolls (every 3 months).

14. TROUBLESHOOTING

Check the following points before requesting for repair:

■The power does not turn on

- Is the specified AC adapter being used?
- Are the AC cable and the AC adapter connected correctly?
- Are the AC adapter and the printer connected correctly?

■The printer does not print or connect

- Is the interface cable connected correctly?
- Do the specifications of the interface cable conform to its specifications of this manual?
- Does the used interface conform to the printer?
- Is the Wireless LAN status normal?
- Is the communication condition between the printer and the host device correct?
- Is the specified thermal paper being used? Is the paper orientation (surface/back) correct?

■An error is shown

- See "LED Indication" described in "6. EACH PART OF PRINTER".
- Are the function settings of the printer correct?

15. SPECIFICATIONS

■Printer Specifications

Item	Specification
Model	SLP720RT
Printing method	Thermal printing
Number of characters per line max.*1	24 dots × 12 dots 36 digits 16 dots × 8 dots 54 digits
Character size (H × W)	1-byte: H 24 dots × W 12 dots, H 16 dots × W 8 dots 2-byte: H 24 dots × W 24 dots, H 16 dots × W 16 dots
Number of effective dots max.	432 dots
Dot density	8 dots/mm
Paper width max. / Printing width max.	58 mm / 54 mm
Printing speed max.	200 mm/s
Paper cutting method	Slide cutting method
Printing cutting type	Full cut, Partial cut (tab left at the center)
Operating temperature	5°C to 45°C (41°F to 113°F)
Relative humidity*2	10%RH to 90%RH
Dimensions (W × D × H)	90 mm × 200 mm × 141 mm*3
Mass	Approx. 1100 g (excluding the thermal paper)
Input voltage	DC24.0 V ±10%
Current consumption*4	Waiting : Approx. 36 mA avg. Printing (print rate 25%) : Approx. 4.8 A max. Printing (print rate 100%) : Approx. 5.7 A max.
Power consumption (Power off state)	SLP720RT-U : 0.182 W SLP720RT-E : 0.454 W SLP720RT-W : 0.220 W

*1: This is the numerical value when character spacing is 0 dots.
*2: The guaranteed humidity at each temperature is within the range shown in Figure 16-1.
*3: Excluding projections
*4: Condition: Dynamic division 144 dots printing

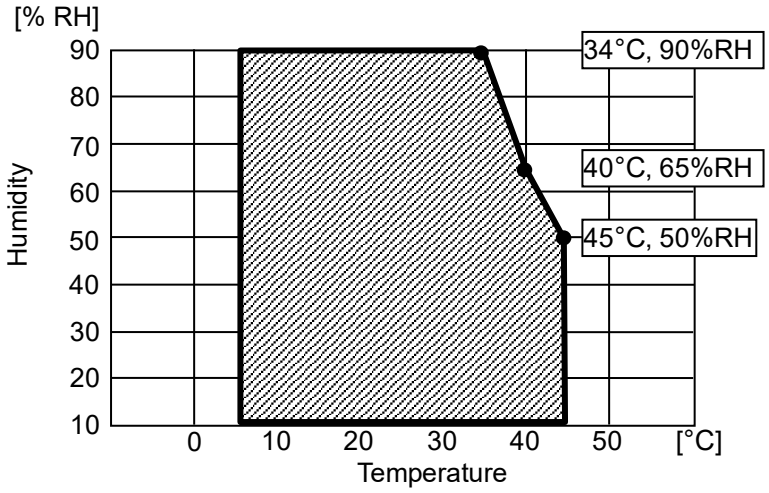

Figure 16-1 Operating Temperature and Humidity Range

■AC Adapter Specifications (Specified Accessories)

Item	Specification
Model identifier	PW-H2415-W1
Input voltage	AC100 to 240 V
Input AC frequency	50/60 Hz
Output voltage	DC24.0 V
Output current	1.5 A
Output power	36.0 W
Average active efficiency	87.40% min.
Efficiency at low load (10%)	77.40% min.
No load power consumption	0.15 W max.
Dimensions (W × D × H)	54.0 mm × 120.8 mm × 33.7 mm*
Mass	Approx. 266 g

*: Excluding the cable.

■Interface Specifications

USB interface specifications

Item	Specification
Version	Ver. 2.0
Printer data transmission mode	Bulk transfer (12 Mbps)

Ethernet interface specifications

Item	Specification
Communication standard	10Base-T, 100Base-TX

Wireless LAN interface specifications

Item	Specification
Communication standard	IEEE802.11b/g/n, IEEE802.11a/n
Network configuration	Infrastructure
Station type	Access Point (Simple AP mode), Client (Client mode)
Certification/encryption	
Security :	None, WEP*, WPA-PSK, WPA2-PSK, WPA-Enterprise*, WPA2-Enterprise*
EAP :	EAP-TTLS*, PEAP*

*: For Client mode only

■Sale Destinations

Sale destinations for the printer and specified accessories are listed below.

Country/ Region*1	SLP720RT			AC Adapter	AC Cable
	USB model	Ethernet + USB model	Wireless LAN model		
Japan	SLP720RT-UK2F11-17	SLP720RT-EK2F11-07	SLP720RT-WK2FJ1-07	PW-H2415-W1	CB-JP08-20A
EU EFTA	SLP720RT-UK2F11-15	SLP720RT-EK2F11-05	SLP720RT-WK2FE1-05		CB-CE05-20A
Turkey	SLP720RT-UK2F11-15	SLP720RT-EK2F11-05	SLP720RT-WK2FE1-05		
UK	SLP720RT-UK2F11-19	SLP720RT-EK2F11-09	SLP720RT-WK2FE1-09		CB-UK04-20A
USA Canada	SLP720RT-UK2F11-13	SLP720RT-EK2F11-03	SLP720RT-WK2FU1-03		CB-US06-20A
Brazil	SLP720RT-UK2F11-13	SLP720RT-EK2F11-03	-		*2

*1: Ask your SII sales representative if the product can be used in countries or regions other than those listed above.
*2: Use the AC cable of 2.0 meters long that complies with safety standards in Brazil.

16. ACCESSORIES AND CONSUMABLE PARTS

■Specified Accessories

Name	Model
AC adapter	PW-H2415-W1
AC cable*	CB-JP08-20A CB-US06-20A CB-CE05-20A CB-UK04-20A
USB cable	IFC-U02-2

*: The shape of an outlet differs by country. Confirm it before using.

■Specified Thermal Paper*

Paper Type	Manufacturer	Model	Paper Width [mm]
Receipt	Nippon Paper	TP50KR-2Y	58
	Nippon Paper	TF60KS-E	58
	Oji Paper	PD160R	58
Linerless label	MAXStick	MS2141602GO	58
	MAXStick	MS2141702GOPLUSD	58
	MAXStick	MS214170PLUSD-B	58
	MAXStick	MS214170PLUSD-C	58
	MAXStick	MS214170PLUSD-P	58
	MAXStick	MS214170PLUSD	58
	MAXStick	MS214170X2	58
	MAXStick	MS11732270X2HRHT	40
	Iconex	9023-1823	58
	Iconex	9023-2242	58
	Iconex	9016-3257	40
	Iconex	9023-1233	40
	Iconex	9023-1873	40
	Iconex	9023-2150	40
	StickyPOS	BT format 58mm x 4in dia roll	58
	StickyPOS	BTX format 58mm x 4in dia roll	58
	StickyPOS	BT format 40mm x 4in dia roll	40
	StickyPOS	BTX format 40mm x 4in dia roll	40
SLP Label			

*: Ask your SII sales representative when considering purchasing.

When using different roll paper or thermal paper from the one specified, the printing quality or specified life of the thermal head would not be guaranteed.

17. MS SETTINGS LIST

: Default value

General Setting 1

MS	Function	Value	
		0	1
1-1	Reserved	-	**Fixed**
1-2	Taken Mode Selection (Taken Mode)	**Enable**[*1]	Disable[*2]
1-3	Mark Mode Selection (Mark Mode)	Enable	**Disable**
1-4 to 5	Standby LED Selection (Standby LED)	00B : Aqua **01B : Green** 10B : Off 11B : Blue	
1-6	Reserved	-	**Fixed**
1-7	Auto Activation by AC Selection (Auto Activation by AC)	Disable	**Enable**
1-8	POWER Switch Function Selection (Power SW)	Disable	**Enable**

*1: When printing continuously on linerless label, set to "Enable".
*2: When printing continuously on receipt or SLP Label, set to "Disable".

General Setting 4

MS	Function	Value	
		0	1
4-1 to 3	Reserved	-	**Fixed**
4-4	Paper Width Selection (Paper Width)	40 mm	**58 mm**
4-5	Reserved	-	**Fixed**
4-6	Paper Auto Detection Selection (Paper Auto Detection)	Enable	**Disable**
4-7 to 8	Maximum Print Speed Selection (Print Speed)	00B : Prohibition 01B : Middle 10B : Prohibition **11B : High**	

General Setting 5

MS	Function	Value	
		0	1
5-1	Automatic Status Response Selection (Auto Status Back)	**Enable**	Disable
5-2	Initialized Response Selection (Init. Response)	**Enable**	Disable
5-3	Data Discard Selection When Error Occurs (Error Through)	**Enable**	Disable
5-4	Data Discard Selection When Output Buffer Full Occurs (Response Data Discarding)	Enable	**Disable**
5-5	Reserved	-	**Fixed**
5-6 to 7	Initialization Performance Selection After Paper Setting (Paper Set Handle)	00B: Disable 01B: Stamp & cut (Stamp&cut) **10B: Initial cut (Standard)** 11B: Disable	
5-8	Cutting Mode Selection After Paper Setting (Cutting Method)	Partial cut (Partial)	**Full cut (Full)**

General Setting 6

MS	Function	Value	
		0	1
6-1 to 8	Print Density Selection (Print Density)	00000000B: 70% 00000001B: 75% 00000010B: 80% 00000011B: 85% 00000100B: 90% 00000101B: 95% **00000110B: 100%** 00000111B: 105% 00001000B: 110% 00001001B: 115% 00001010B: 120% 00001011B: 125% 00001100B: 130% Other than above: Prohibition	

General Setting 7

MS	Function	Value	
		0	1
7-1 to 8	Thermal Paper Selection (Thermal Paper)	00000000B: Receipt **00000001B: Linerless label** 00000010B: SLP Label Other than those above: Prohibition	

Mark Position Correction

MS	Function	Value	
		0	1
8 to 9	Mark Position Correction MS8 : Lower 8 bits MS9 : Higher 8 bits	Total of higher 8 bits and lower 8 bits : -68 to 2400 dots **(Default : 58)**	

Mark Detection Maximum Feeding Length Setting

MS	Function	Value	
		0	1
10 to 11	Mark Detection Maximum Feeding Length Setting MS10 : Lower 8 bits MS11 : Higher 8 bits	Total of higher 8 bits and lower 8 bits : 1 to 300 mm **(Default : 190)**	

Mark Detection Threshold Value

MS	Function	Value	
		0	1
12-1 to 8	Mark Detection Threshold Value	01H to EFH **(Default : 80H)**	

Command Setting

MS	Function	Value	
		0	1
13-1	Kanji Code System Selection (Kanji Code)	Shift-JIS Code	**JIS Code**
13-2	Reserved	-	**Fixed**
13-3	Realtime Command Selection (Realtime Command)	Disable	**Enable**
13-4 to 8	Reserved	-	**Fixed**

International Character Setting

MS	Function	Value	
		0	1
15	International Character Setting (International Character)	**00000000B: USA** 00000001B: France 00000010B: Germany 00000011B: United Kingdom 00000100B: Denmark I 00000101B: Sweden 00000110B: Italy 00000111B: Spain I 00001000B: Japan 00001001B: Norway 00001010B: Denmark II 00001011B: Spain II 00001100B: Latin America 00010001B: Arabia Other than those above: Prohibition	

Character Code Table Setting

MS	Function	Value	
		0	1
16	Character Code Table Setting (Character Code Table)	**00000000B: USA, Standard Europe (Code Page437)** 00000001B: Katakana 00000010B: Multilingual (Code Page850) 00000011B: Portuguese (Code Page860) 00000100B: Canadian-French (Code Page863) 00000101B: Nordic (Code Page865) 00001101B: Turkish (Code Page857) 00001110B: Greek (Code Page737) 00001000B: Latin (Code Page1252) 00001001B: Russian (Code Page866) 00001010B: Eastern Europe (Code Page852) 00001011B: Euro (Code Page858) 00100010B: Cyrillic (Code Page855) 00100101B: Arabic (Code Page864) 00101101B: Central European (Code Page1250) 00101110B: Cyrillic (Code Page1251) 00101111B: Greek (Code Page1253) 00110000B: Turkish (Code Page1254) 11111111B: User Page Other than those above: Prohibition	

General Setting 17

MS	Function	Value	
		0	1
17-1 to 2	Paper Saving Setting (Paper Saving)	00B: Space Between Lines 0 dots 01B: Space Between Lines 2 dots 10B: Space Between Lines 4 dots **11B: Disable**	
17-3	Feed Backward Setting After Paper Cutting (Backfeed After Cut)	**Enable**	Disable
17-4 to 8	Reserved	-	**Fixed**

Seiko Instruments Inc.
563, Takatsukashinden, Matsudo-shi,
Chiba 270-2222, Japan
Print System Division
Tel: +81-47-709-0925
Fax: +81-47-709-1793

Seiko Instruments U.S.A., Inc.
Thermal Printer Div.
21221 S. Western Avenue, Suite 250, Torrance, CA 90501, U.S.A.
Tel: +1-800-688-0817 Fax: +1-310-517-7779

Seiko Instruments GmbH (Economic operator)
Siemensstrasse 9, D-63263 Neu-Isenburg, Germany
Tel: +49-6102-297-0 Fax: +49-6102-297-50100
info@seiko-instruments.de

Seiko Instruments Trading (H.K.) Ltd.
7/F, Ying Tung Industrial Building, 802 Lai Chi Kok Road, Kowloon, Hong Kong
Tel: +852-2494-5160 Fax: +852-2424-0901

Seiko U.K. Limited (Authorized Representative in the United Kingdom)
SC House, Vanwall Road, Maidenhead, Berkshire, SL6 4UW

Download page: https://www.sii.co.jp/sps/eg/download/index.html

(Specifications are subject to change without notice.)